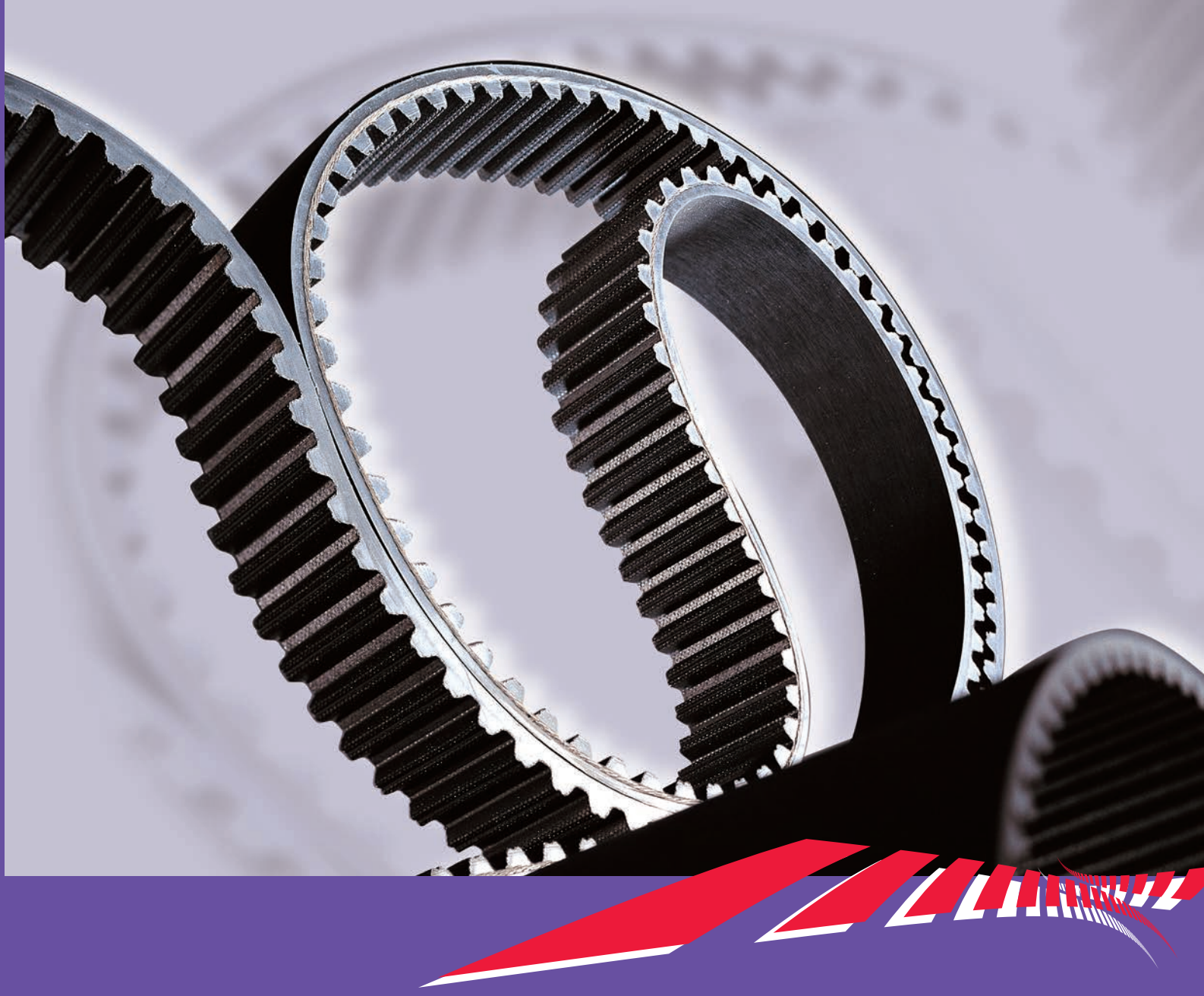

ISORAN

Synchronous Timing Belt

MEGADYNE

INDEX

Introduction to endless rubber timing belts **2**

Classifications **4**

Technical calculation **6**

Calculation example **17**

Forces on axes and bearings **22**

Causes of belt failure **23**

Centre distance tables **24**

Belt data

- ISORAN AND ISORAN DD **44**
- MXL **48**
- XL - XL DD **49**
- L - L DD **50**
- H - H DD **51**
- XH **52**
- XXH **53**
- ISORAN RPP AND ISORAN RPP DD **54**
- RPP3 **58**
- RPP5 - RPP5 DD **59**
- RPP8 - RPP8 DD **60**
- RPP14 - RPP14 DD **61**
- ISORAN SILVER **62**
- ISORAN SILVER5 **66**
- ISORAN SILVER8 **67**
- ISORAN SILVER14 **68**
- ISORAN GOLD **69**
- ISORAN GOLD8 **73**
- ISORAN GOLD14 **74**

Special execution feasibility **75**

Useful formulas and conversion table **76**

INTRODUCTION TO ENDLESS RUBBER TIMING BELTS

In order to improve and make easier the designers' job, Megadyne has decided to simplify and reorganize most of the endless rubber timing belts in just one calculation handbook. In the following pages you will find all the needed information regarding technical calculation, sizes and data about Isoran, Isoran DD, Isoran RPP, Isoran RPP DD, Isoran Silver and Isoran Gold.
Our wide range of products with different power rates and several structures allows Megadyne always to find the best solution for a very wide spectrum of applications.

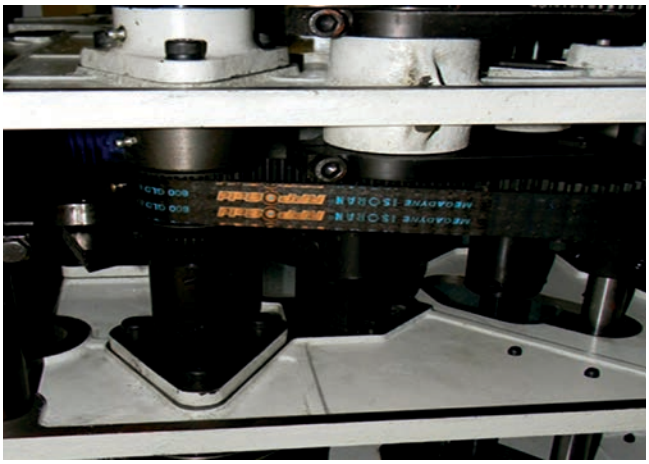

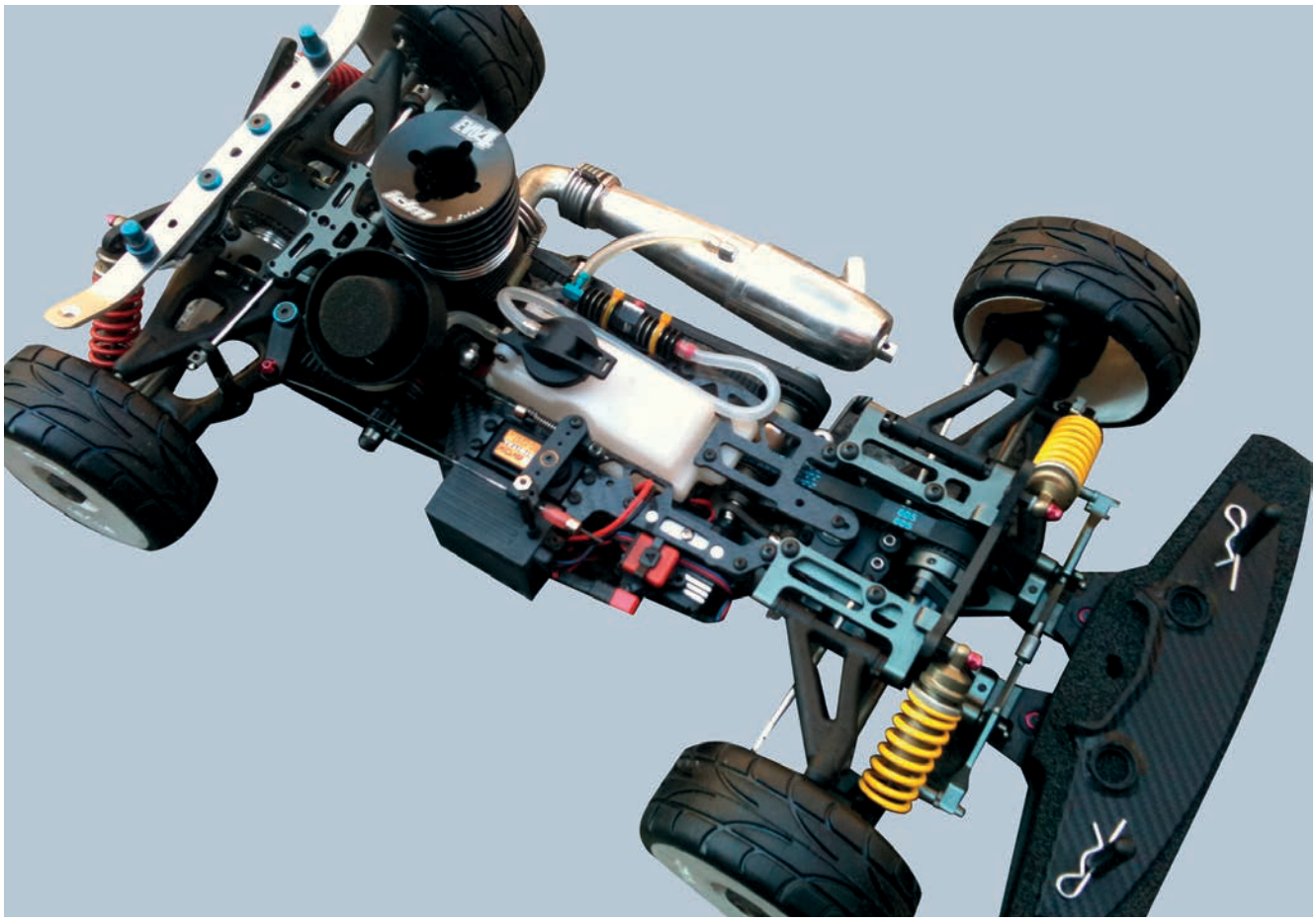

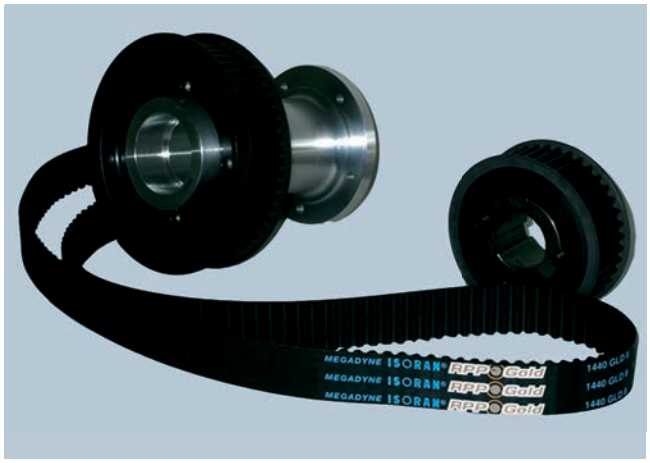

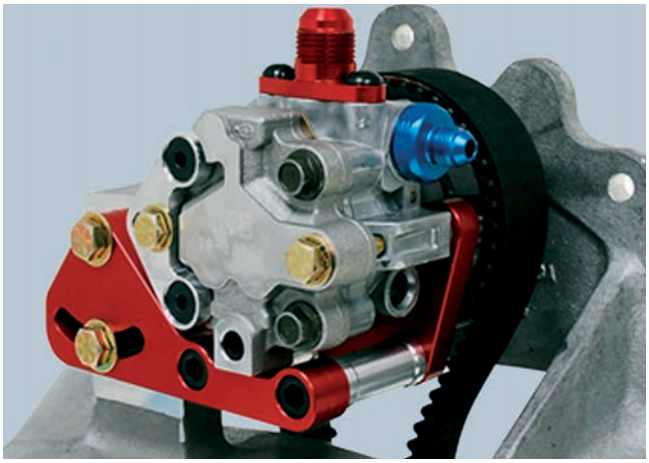

INTRODUCTION TO ENDLESS RUBBER TIMING BELTS

Thanks to their features, Megadyne's Endless Rubber Timing belts can be used in a very wide range of applications like power transmission (or conveyor) such as:

- appliances
- pellet extruder machines
- wood cutting machines
- dobby loom machines
- food mixers
- cooling systems
- radio controlled cars
- power wheelchair
- flexible packaging machines
- carton industry

STANDARD RANGE

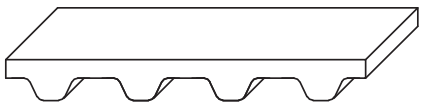

MXL XL L H XH XXH

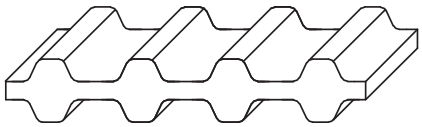

XL DD L DD H DD

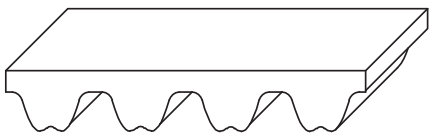

RPP3 RPP5 RPP8 RPP14 SILVER5 SILVER8 SILVER14
GOLD8 GOLD14

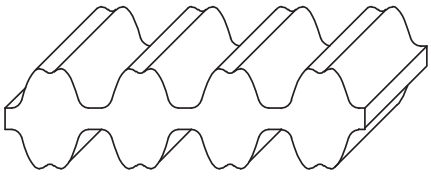

RPP5 DD RPP8 DD RPP14 DD

CLASSIFICATIONS

Megadyne's Isoran transmission belts are rubber chloroprene based belts with glass cord suited for a very wide range of application in power transmission field. This type of belts puts together the advantages of gears and V-belts minimizing the drawbacks of both.

These belts allow:

- synchronous transmission
- high and constant angular speeds
- high efficiency
- resistance to peak loads
- low noise transmission
- no lubrication
- no maintenance
- linear speed up to 30 m/s

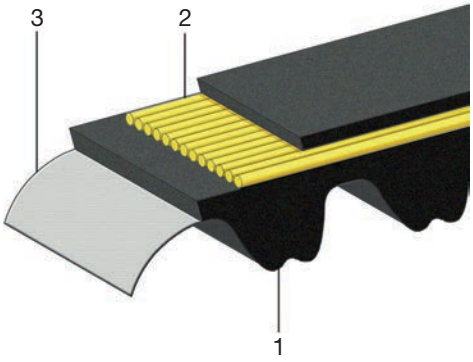

1) The body is made of high quality chloroprene compound having:

- high fatigue resistance
- high resistance to heat and environmental agents
- good resistance to mineral oils
- total shape keeping by the time

Hardness changes according to the kind of belt:

- 74 ShA for Isoran, Isoran DD, Isoran RPP and Isoran RPP DD
- 90 ShA for Isoran Silver and Isoran Gold

Silver and Gold belts have higher quality and features compound each to get higher performances.

2) Tensile member made of high module fiberglass cords, S and Z twisted, which grant:

- high breaking strength
- very good resistance to stresses
- no elongation by the time
- very good adhesion with the belt body compound

Gold belts have special high power K-glass cords.

3) Nylon fabric on the teeth treated to improve lubrication during working; this allows:

- extreme abrasion resistance
- low friction coefficient
- high transmission efficiency
- long belt and pulley operational lifetime

Gold belts have two Nylon fabric plies to improve the above features.

PERFORMANCE COMPARISON INDEX

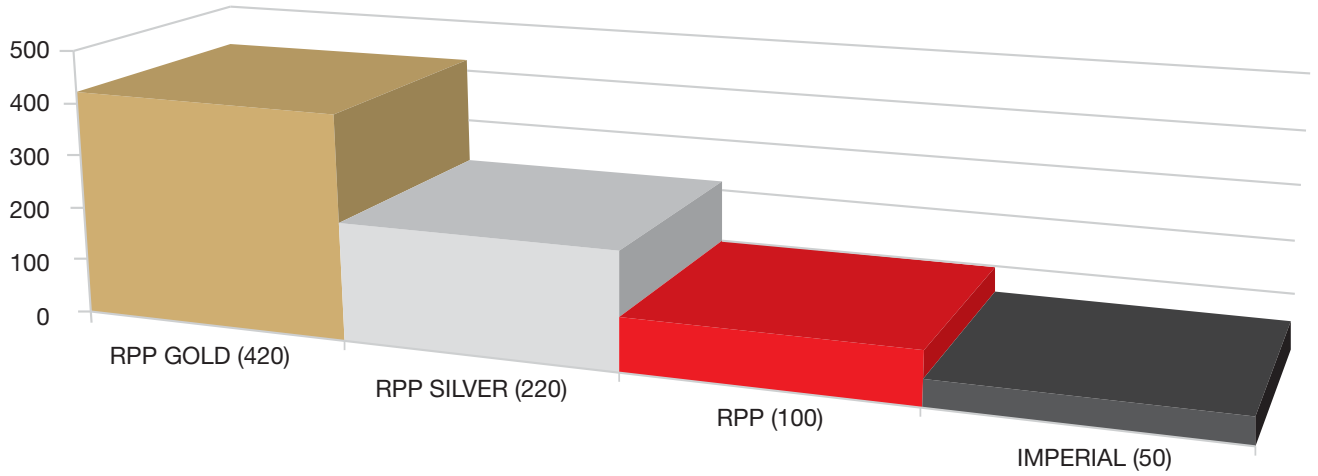

Please consider that the above graph is merely indicative.

COATING

Isoran can be manufactured with special coating on the back side. Please check with our Application Department for more details.

IDENTIFICATION CODE

Using the information in the table below, it is possible to identify the correct belt for every application. The code is composed of letters and numbers as the following examples:

1	+	2	+	3	+	4
1400	+	GOLD	+	14	+	M55
510	+	H	+			075

1) This number indicates the pitch length of the belt. The value is in mm for belts with a metric pitch while it's in tenth of inch for the imperial pitches (MXL are the only coded in hundreds of inches).
2) This code, composed by letters, indicates the belt profile.
3) This number indicates the standard pitch of the belt. It is expressed in mm, and it's used only for belts with a metric pitch.
4) This code, composed by letters and numbers, indicates the belt width. The value is in mm for belts with a metric pitch, while it's in hundreds of inches for the belts with imperial pitches.

TECHNICAL CALCULATION

CONVEYOR BELTS

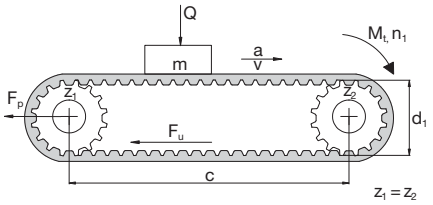

POWER TRANSMISSION

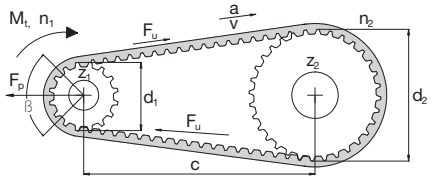

Symbol	Unit	Definition
b	mm	belt width
L	mm	belt length
c	mm	centre distance
d_i	mm	pitch diameter of pulley i
m	kg	total conveyed mass
a	m/s^2	acceleration
v	m/s	belt speed
F_s	-	service factor
g	m/s^2	gravity (9.81)
μ	-	coefficient of friction between belt and guide
p	-	belt pitch
MTL	N	Max Traction Load

Max Traction Load is maximum acceptable traction on cords

Symbol	Unit	Definition
T_s	N	pretension
F_U	N	peripheral force
$F_{p\ spec}$	N/cm	transmittable force per tooth per unit
M_t	Nm	drive torque
n_i	1/min	revs/min (RPM) on pulley i
P	kW	drive power
Q	N	force exerted by mass (m)
z_i	number of teeth on pulley i	
z_m	number of teeth in mesh on drive pulley	
z_c	number of belt teeth	
i	speed ratio	
z_L	number of teeth on largest pulley	
BS	N	Breaking Strength

Breaking Strength is the necessary load to break belt cord

DRIVE CALCULATION PROCEDURE

CALCULATION OF TRASMITTED POWER

From Table 2 at page 7 select the appropriate service factor F_S according to:

- the type of the driven machine
- the engine class, depending on the ratio between the peak load over the rated load
- the service conditions (duty cycle category)

If you are designing a drive with a speed up ratio ($i = n_1 / n_2 < 1$) you need to consider into the above mentioned Service Factor F_S the correction factor C_m as reported in the following table:

TABLE 1 - C_M FACTOR

Speed ratio $i = n_1 / n_2$	C_m
1÷0,8	0
0,79÷0,58	+0,1
0,57÷0,40	+0,2
0,39÷0,28	+0,3
≤0,28	+0,4

The corrected service factor C_C will be:

$$C_C = F_S + C_m$$

The design power P_C is obtained multiplying the input power by the corrected service factor:

$$P_C = P \bullet C_C$$

TABLE 2 - SERVICE FACTOR F_s

	DRIVER MACHINE								
	Class A			Class B			Class C		
	Overload peak up to 149% of the rated load			Overload peak from 150% up to 249% of the rated load			Overload peak from 250% up to 400% of the rated load		
	- AC Motor: asyncronous Star-Delta starting - DC Motor: shunt wound - Internal combustion engines: 8 cyl. and up			- AC Motor: asyncronous direct switch starting - Syncronous: normal torque - DC Motor: compound wound - Internal combustion engines: 6 cyl.			- AC Motor: single phase; all asyncronous: double cage motors - Syncronous: high torque - DC Motor: series wound - Internal combustion engines: 4 cyl. - Hydraylic motors, line shafts		
	Duty cycle category								
	Intermittent service	Normal service	Continuos service	Intermittent service	Normal service	Continuos service	Intermittent service	Normal service	Continuos service
DRIVEN MACHINE	**< 8 hours daily**	**8 to 16 hours daily**	**> 16 hours daily**	**< 8 hours daily**	**9 to 16 hours daily**	**> 16 hours daily**	**< 8 hours daily**	**10 to 16 hours daily**	**> 16 hours daily**
Category 1: LOW UNIFORM LOAD/TORQUE Office equipment. Measuring equipment. Instrumentation. Display equipment. Laundry machinery (general). Line shaft. Agitators and mixers for liquids. Bakery machines. Conveyors: belt, light package, oven belt (ore, coal, sand).	1,3	1,4	1,5	1,5	1,6	1,7	1,7	1,8	1,9
Category 2: MEDIUM UNIFORM LOAD/TORQUE Light woodworking equipment: lathers, band saws. Agitators, mixers for semi-liquid. Screens: drum, conical. Machine tools: lathers, drill presses, screw machines.	1,4	1,5	1,6	1,6	1,7	1,8	1,8	1,9	2,0
Category 3: NOT UNIFORM LOAD/TORQUE Textile machinery: spinning frames, twisters warpers, warping machines. Heavy woodworking equipment: jointer, circular saws, planes. Laundry machinery: extractors, washers. Machinery for rubber processing. Machine tools: grinders, milling machines, shapers. Conveyors: apron, bucket, elevators, screw. Centrifugal compressors: hoist, elevators, generators and exciters. Printing machinery. Fans, blowers: centrifugal, induced, draft exhausters, propeller, mine fans.	1,5	1,6	1,7	1,7	1,8	1,9	1,9	2,0	2,1
Category 4: SHOCK LOAD/ TORQUE Textile machinery: dobbies, looms. Hammer mills. Paper machinery. Positive fan blowers. Reciprocating compressors. Machinery for pottery and earthenware. Centrifuges.	1,7	1,8	1,9	1,9	2,0	2,1	2,1	2,2	2,3
Category 5: HIGH UNIFORM LOAD/TORQUE Crushers: roll, ball, jaw. Mills: ball, rod, pebble, etc. Reciprocating pumps. Saw mill equipment.	1,9	2,0	2,1	2,1	2,2	2,3	2,3	2,4	2,5
With reverse bending (eg. external idler)					+0,1				

NOTE: these service factors are adequate for most of belt drive applications. Service factors can be substituted only where the input data and the working conditions are exactly known. In this case service factors may be adjusted based upon an understanding of the severity of actual drive operating conditions.

TABLE 3 - BELT PITCH SELECTION TABLES

ISORAN AND ISORAN DD

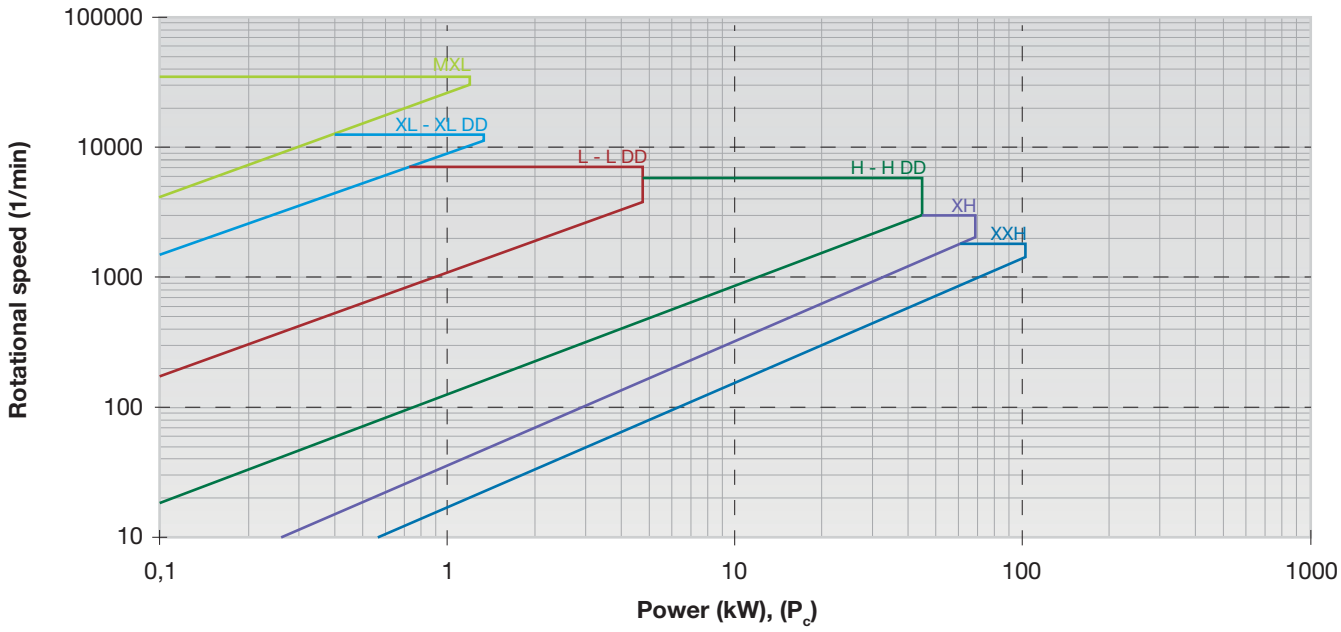

RPP3, RPP5, RPP5 DD AND SILVER5

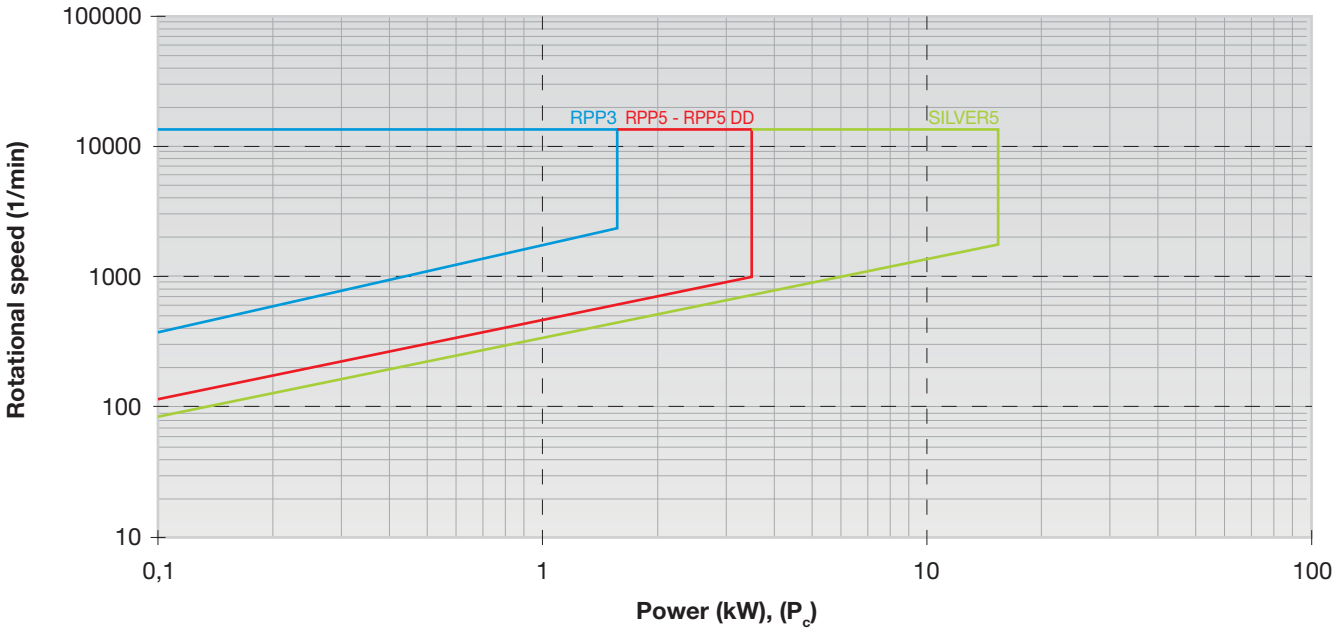

RPP8, RPP8 DD, SILVER8 AND GOLD8

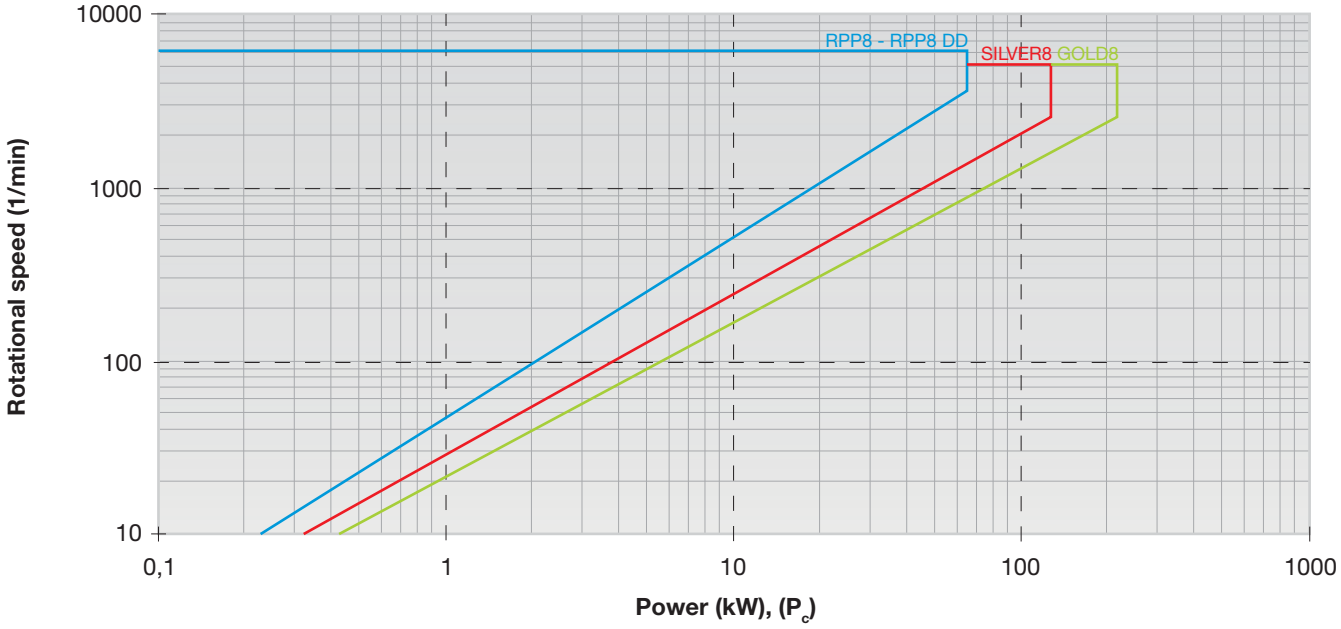

RPP14, RPP14 DD, SILVER14 AND GOLD14

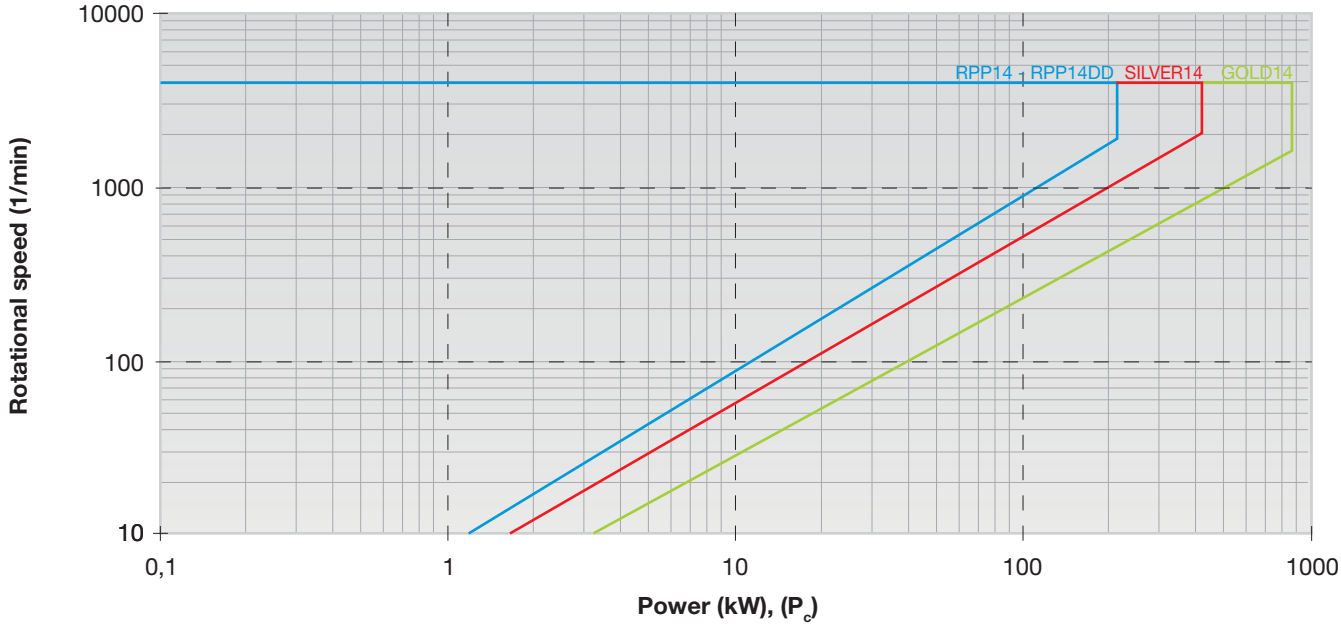

CHOICE OF BELT TYPE AND PITCH

Several options are available, starting from Isoran and improving the belt's power rate getting up to Isoran RPP, Isoran Silver and eventually Isoran Gold, as shown on the graphs in the previous pages 8 and 9.

The graph has:

- design power Pc along the X-axis
- speed of the fastest shaft along the Y-axis.

With these input data you will locate an intersection point. The area surrounding this point indicates the pitch you should use for your design. As shown, the most powerful belt is the Isoran Gold. If it is not enough, we suggest to consult our Platinum calculation handbook.
If you wish, you can compare and design different options, both in terms of power rate and pitch. Then you might select the drive best matching your size requirements or the most economical one.

CHOICE OF PULLEY, BELT AND CENTRE DISTANCE

According to your space and speed ratio requirements, you might select the pulleys among those you can find in our Megapulley catalogue. To help you on the choice of the pulleys, you can use the below chart indicating a selection of possible pulleys that give you the needed speed ratio.

TABLE 4 - SPEED RATIO TABLES

Speed Ratio (approximate values) z_2/z_1	z_2/z_1					
1,06	38/36	36/34	34/32			
1,13	90/80	72/64	36/32	34/30		
1,17	56/48	34/29	28/24			
1,25	90/72	80/64	40/32	30/24		
1,33	64/48	48/36	40/30	32/24		
1,50	72/48	48/32	36/24			
1,75	112/64	56/32				
2,00	144/72	112/56	80/40	72/36	64/32	56/28
2,25	144/64	90/40	72/32			
2,33	112/48	80/34				
2,50	90/36	80/32				
2,67	192/72	80/30	64/24			
3,00	192/64	144/48	90/30	72/24		
3,27	144/44	72/22				
4,00	192/48	144/36	112/28			
4,36	192/44					
4,80	192/40	144/30				
5,33	192/36					
6,00	192/32	144/24				
7,38	192/26					
8,00	192/24					
8,73	192/22					

Please mind that the bigger is the pulley, the more will be the power the belt can transmit and the less will be the belt width; on the other side, a big pulley requires more space and will be heavier. Please mind that each pitch has its own minimum dimension; this value is given by the smallest available pulley in the corresponding Basic Performance table.

Speed ratio is: (1 refers to driver pulley: 2 refers to driven pulley)

$$i = \frac{n_1}{n_2} = \frac{z_2}{z_1}$$

- If speed ratio is equal to one, $z_1 = z_2$, belt length will be

$$L = 2\,c + \pi \bullet d_1$$

- If speed ratio is not equal to one and you have dimension limits on one of the two pulleys, you should consider this value and check on the Megapulley catalogue a pulley that can fit on your layout. Then, thanks to the formulas

$$z_1 = \frac{z_2}{i} \quad \text{and} \quad z_2 = z_1 \bullet i$$

you can also select the other pulley. Considering the centre distance c, the belt length L will approximately be:

$$L \approx 2\,c + 1{,}57\,(d_1+d_2) + \frac{(d_2 - d_1)^2}{4\,c}$$

Once you find the needed belt length, both for speed ratio equal to one or not, you will proceed checking on our available belt lengths on belt data pages; you can choose both the closest longer or the closest shorter available belt. With the actual belt length value L_c you selected and the chosen pulleys you can find the new centre distance c_c as per shown below:

- If speed ratio is equal to one, the new centre distance will be

$$c_c = \frac{L_c - (\pi \times d_1)}{2}$$

- If speed ratio is not equal to one, you can use the following formula

$$c_c = \frac{1}{4}\left\{L_c - \frac{p}{2}(z_1+z_2) + \sqrt{[L_c - \frac{p}{2}(z_1+z_2)]^2 - 2\,[\frac{p}{\pi}(z_2-z_1)]^2}\right\}$$

or you can use the centre distance table from page 24
In this table, you have:

- $z_c - z_1$ along the columns
- $z_2 - z_1$ along the rows

At the intersection of the given column and row you will find a number that is the centre distance in teeth number c_t; so, multiplying this number by the pitch p you will get the actual centre distance:

$$c_c = p \bullet c_t$$

If one or both of the imput values you have are out of the table's range, you should divide both values by two. Then, the calculated centre distance will be half than the real one, it means you need to multiply by two the found number to get the correct value of c_c.
We warmly suggest to check that the ratios between the belt's teeth number and the pulleys' teeth numbers are not integers. If this happens it is necessary to modify the drive wherever possible (centre distance, ratio, pulleys diameter) otherwise belt life could be massively reduced.

DETERMINATION OF THE ACTUAL POWER RATING P_{ba}

The actual power rating P_{ba} comes from the following formula:

$$P_{ba} = P_b \cdot C_d \cdot K_1$$

where:

- P_b is the belt's basic performance; each belt type and each pitch has its own basic performance table; you can find it in belt data pages. It depends on driver pulley's number of teeth and on driver pulley speed.

- C_d is the teeth in mesh correction factor. Because of power rating lists in this catalogue are based on a minimum of six teeth in mesh between the belt and the pulley, you have to consider this factor whenever you have less than six teeth in mesh because this will lead to an excessive tooth load. To determine the number of teeth in mesh on the smallest pulley you can use the following formula:

$$z_m = \left\{0{,}5 - \left[\frac{4\,p}{79\,c} \cdot (z_l + z_s)\right]\right\} \cdot z_s$$

where z_l is the number of teeth on the biggest pulley and z_s is the number of teeth on the smallest pulley.
Concerning z_m, always consider the bottom closest integer number. Based on this value, you will select the teeth in mesh correction factor C_d as per the following table:

TABLE 5 - C_d FACTOR

Number of teeth in mesh z_m	C_d
6 or more	1
5	0,80
4	0,60
3	0,40
2	0,20

- K_1 is the belt length correction factor. Because of power rating lists in this catalogue are based on specific belt lengths, you have to consider this factor and choose K_1 from the below Table, considering the actual belt length L_c you selected. For belt with imperial pitch, please use K_1 equal to 1.

TABLE 6 - K_1 FACTOR

RPP3		RPP5 - RPP5 DD SILVER5		RPP8 - RPP8 DD SILVER8 - GOLD8		RPP14 - RPP14 DD SILVER14 - GOLD14	
Belt lenght (mm)	K_1	Belt lenght (mm)	K_1	Belt lenght (mm)	K_1	Belt lenght (mm)	K_1
< 190	0,8	< 440	0,8	< 600	0,8	< 1190	0,80
191 - 260	0,9	441 - 560	0,9	601 - 800	0,9	1191 - 1610	0,90
261 - 400	1,0	561 - 800	1,0	881 - 1280	1,0	1611 - 1890	0,95
401 - 600	1,1	801 - 1100	1,1	1281 - 1760	1,1	1891 - 2450	1,00
> 600	1,2	> 1100	1,2	> 1760	1,2	2451 - 3150	1,05
						> 3150	1,10

DETERMINATION OF BELT WIDTH

To find out the belt width we will find the width coefficient C_w first:

$$C_w = \frac{P_c}{P_{ba}}$$

Then, you can get the appropriate belt width b from the following tables. It is recommended to select the next higher standard width on the below tables. In this way you will get the needed belt width.

TABLE 7 - BELT WIDTH FACTOR $C_{w,\ listed}$

Belt width ISORAN and ISORAN DD			$C_{w,\ listed}$
Code	mm	inch	
012	**3,0**	**1/8**	**0,09**
019	**4,8**	**3/16**	**0,14**
025	**6,4**	**1/4**	**0,18**
031	**7,9**	**5/16**	**0,23**
037	**9,5**	**3/8**	**0,30**
044	11,1	7/16	0,37
050	**12,7**	**1/2**	**0,45**
062	15,9	5/8	0,60
075	**19,1**	**3/4**	**0,72**
088	22,2	7/8	0,80
100	**25,4**	**1**	**1,02**
125	31,8	1 1/4	1,31
150	**38,1**	**1 1/2**	**1,58**
175	44,5	1 3/4	1,87
200	**50,8**	**2**	**2,17**
250	63,5	2 1/2	2,77
300	**76,2**	**3**	**3,41**
350	88,9	3 1/2	4,16
400	**101,6**	**4**	**4,84**
500	**127,0**	**5**	**6,25**
600	152,4	6	7,68
700	177,8	7	9,16
800	203,2	8	10,67
900	228,6	9	12,19
1000	254,0	10	13,77

Widths in bold are standard widths, we suggest to choose among these.

Once the belt width is defined, it is possible to calculate the drive safety factor σ, the ratio between the actual belt power rating and the design power:

$$\sigma = \frac{\text{Actual Belt Power Rating}}{\text{Design Power}} = \frac{P_{ba} \bullet C_{w,listed}}{P_c}$$

This value will be higher than one if you choose the next higher standard width; it gives an indication of the maximum extra load that the belt can tolerate.

Belt width (mm)	$C_{w,\ listed}$			
	RPP3	RPP5 RPP5 DD	RPP8 RPP8 DD	RPP14 RPP14 DD
5	0,76			
6	**1,00**	**0,53**		
9	**1,71**	**1,00**	0,37	
15	**3,14**	**1,93**	0,71	
20	4,33	2,71	**1,00**	
25	5,52	**3,48**	1,29	0,56
30		4,26	**1,58**	0,71
40			2,16	**1,00**
50			**2,74**	1,29
55			3,03	**1,44**
75			4,19	2,03
85			**4,77**	**2,32**
100				2,76
115				**3,21**
170				**4,82**

Belt width (mm)	$C_{w,\ listed}$		
	SILVER5	SILVER8 GOLD8	SILVER14 GOLD14
6	**0,666**		
9	**1,000**		
10	1,111	0,500	
15	**1,666**	0,750	
20	2,222	**1,000**	**0,500**
25	**2,778**	1,250	0,625
30	3,333	**1,500**	**0,750**
40		**2,000**	**1,000**
50		**2,500**	**1,250**
55		**2,750**	**1,375**
75		3,750	1,875
85		**4,250**	**2,125**
100			2,500
115			**2,875**
170			**4,250**

PRE-TENSIONING

Pre-tensioning is needed to have a good belt running. If pretension T_s is too low, tooth jump can occur under the most sever load conditions; if it is too high it will increase the noise levels, reduce the belt life and may damage bearings, pulleys and other transmission parts.

The right pretension is obtained by the following formula:

$$T_s = \frac{500 \cdot P \cdot K_m}{v} + (m_l \times v^2)$$

where:

- T_s is the needed pretension on the pulleys'axes;
- K_m is the factor of motor class, that considers the influence of motor peak torque; see the value in the below table:

TABLE 8 - K_m FACTOR

CLASS A	CLASS B	CLASS C
1,35	1,50	1,75

- v is the belt linear speed you can calculate with the following formula:

$$v = \frac{d_i \cdot n_i}{19100}$$

where diameter d_i is in mm and rotational speed n_i is in 1/min.

- m_l is the mass per length unit; it changes according to the belt type and pitch. See the following table 9.

For unusual, shock or pulsating loads we suggest to consult our Application Department for guidance. Axial load on bearings F_a will be equal to T_s when speed ration is equal to one. Otherwise, F_a will be:

$$F_a = 2 \cdot T_s \cdot \operatorname{sen} \frac{\beta}{2}$$

where β is the angle of wrap as per Image 1 page 15.

In transmission with two pulleys, you can calculate β with the following formula:

$$\beta = 180° + \operatorname{arcsen} \left(\frac{d_2 - d_1}{2c_c}\right)$$

TABLE 9 - BELT MASS PER UNIT LENGTH (kg/m)

Belt width		MXL	XL	L	H	XH	XXH	XL DD	L DD	H DD
(inches)	[mm]									
012	3,05	0.004								
019	4,83	0.007								
025	6,35	0.009	0.014					0,016		
031	7,90		0.017					0,019		
037	9,40		0.020					0,023		
050	12,70			0,041					0,047	
075	19,05			0,062	0,081				0,070	0,091
100	25,40			0,083	0,108				0,093	0,122
150	38,10				0,163					0,183
200	50,80				0,217	0,636	0,752			0,244
300	76,20				0,325	0,954	1,128			0,366
400	101,60					1,272	1,504			
500	127,00						1,880			

TABLE 9 - BELT MASS PER UNIT LENGTH (kg/m)

Belt width (mm)	RPP3	RPP5	SLV5	RPP8	SLV8	GLD8	RPP14	SLV14	GLD14	RPP5 DD	RPP8 DD	RPP14 DD
6	0,016											
9	0,025	0,039	0,036							0,043		
15	0,041	0,065	0,060							0,072		
20				0,114	0,113	0,110					0,138	
25		0,108	0,100							0,120		
30				0,171	0,169	0,165					0,207	
40							0,463	0,400	0,404			0,492
50				0,284	0,282	0,275					0,345	
55							0,637	0,550	0,556			0,676
85				0,484	0,480	0,467	0,984	0,850	0,858		0,586	1,045
115							1,332	1,150	1,161			1,414
170							1,969	1,700	1,717			2,091

STATIC TENSION CHECK

There are two methods to measure the correct static tension:

a) The elongation method, based on measuring the force needed to deflect one span of the belt by a given amount (see below image).

Image 1

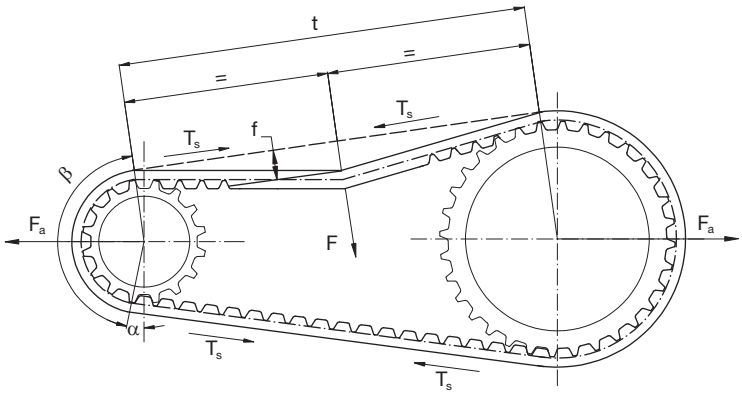

The force F to apply to deflect the belt F has to be:

$$\frac{T_s}{16} < F < \frac{1{,}5 \bullet T_s}{16} \qquad \text{(a)}$$

The lenght of the free span t of belt where we will apply this force can be calculated as per below:

$$t = \sqrt{c^2 - \left(\frac{d_2 - d_1}{2}\right)^2}$$

The deflection distance f will be:

$$f = \frac{t}{64}$$

With the belt installed on the drive and tensioned to remove all the slacks in the system (snug fit), you can begin the tensioning procedure. Put a force F on the centre of the free span t and deflect the belt up to a deflection f as per above calculation. Be sure that both pulleys are free to rotate. For belts wider than 50 mm put a rigid stuff like a key stock as wide as the belt and across it and apply the force through the rigid stuff to prevent belt distortion and to get a good result.

Once you get the right deflection f, measure the deflection force F and compare it with the formula (a) page 15:

- If the value is inside the range, pretension is right;
- If the value is higher than the maximum, the belt is too tight, the belt should be slightly slackened;
- If the value is lower than the minimum, the belt has not enough tension and has to be tightened.

If the value is out of range, please repeat this procedure until you will not get an inside range value.

b) The vibration method, based on the use of a belt tension gauging equipment. This device consists of a small sensing head which is held across the belt to be measured. The belt is then tapped to induce the belt to vibrate at its natural frequency. The vibration are detected and the frequency of vibration is then displayed on the measuring unit. The relation between belt static tension Tand the frequency of vibration f may be calculated using the following formula:

$$f = \frac{1}{2\,t} \cdot \sqrt{\frac{T_s}{m_l}} \quad \text{or} \qquad T_s = 4 \cdot m_l \cdot t^2 \cdot f^2$$

CALCULATION EXAMPLE

MACHINE DATA

P = 25 kW
n_1 = 1000 rpm
n_2 = 500 rpm
$d_{2,max}$ = 250 mm
Motor class: C
Application: textile
Type of driven machine: Not uniform torque (Cat 3)
Working hours: 8-16 h/day
Approximate centre distance: 650 mm

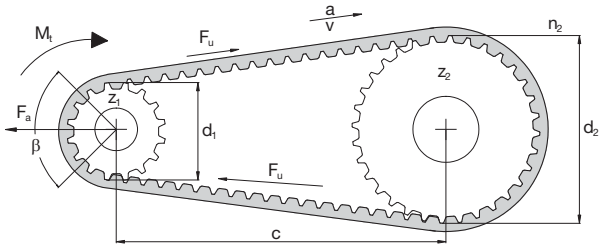

CALCULATION OF TRANSMITTED POWER

According to the type of driven machine, the engine class and the service conditions we can find that the suggested service factor F_s is 2.0 according to table 2 page 7.

Because of the value of n_1 and n_2, $i = \frac{n_1}{n_2} = \frac{1000}{500} = 2$, $C_m = 0$

This means that corrected safety factor is:

$$C_c = F_s + C_m = 2 + 0 = 2$$

The design power is:

$$P_c = P \bullet C_c = 25 \bullet 2 = 50 \text{ kW}$$

CHOICE OF BELT TYPE AND PITCH

Using the tables at page 8 and 9, having:

- P_c = 50 kW
- Speed of the fastest shaft n_1 = 1000 1/min

We will find that possible pitches are: XXH, RPP14, SILVER14, GOLD14 or even a GOLD8. All these belts are possible alternatives, to choose an higher power belt as Silver or even a Gold means to get a narrower belt than a less performing one.
We can choose the GOLD8.

CHOICE OF PULLEY, BELT AND CENTRE DISTANCE (GOLD8)

Because of the maximum allowed pulley dimension, $z_{2,max}$ we can choose is

$$z_{2,max} = \frac{d_{2,max} \bullet \pi}{p} = \frac{250 \bullet 3{,}14}{8} \approx 98$$

Selecting from table at page 10, considering i = 2, a good combination option can be to use z_1 = 40 and z_2 =80, that is less than $z_{2,max}$, with respectively d_1 = 101,86 and d_2 = 203,72 mm.
Because centre distance has to be close to 650 mm, we will firstly calculate the approximate belt length:

$$L \approx 2\,c + 1{,}57\,(d_1 + d_2) + \frac{(d_2 - d_1)^2}{4\,c} =$$

$$= 2 \bullet 650 + 1{,}57 \bullet (101{,}86 + 203{,}72) + \frac{(203{,}72 - 101{,}86)^2}{4 \bullet 650} = 1783{,}75 \text{ mm}$$

In our range we have 1760 and 1800 mm long available lengths. If you have layout problems, you might choose the shortest belt. Otherwise we can also choose the longest one, the 1800 mm long belt, with 225 teeth, that we choose; anyway both options are valid. We call this length L_c.

CALCULATION EXAMPLE

The actual centre distance can be calculated:

- By the formula

$$c = \frac{1}{4}\left\{L_c - \frac{p}{2}(z_1 + z_2) + \sqrt{\left[L_c - \frac{p}{2}(z_1 + z_2)\right]^2 - 2\left[\frac{p}{\pi}(z_2 - z_1)\right]^2}\right\} =$$

$$= \frac{1}{4}\left\{1800 - \frac{8}{2}(40 + 80) + \sqrt{\left[1800 - \frac{8}{2}(40 + 80)\right]^2 - 2\left[\frac{8}{\pi}(80 - 40)\right]^2}\right\} = 658{,}029 \text{ mm}$$

- Using the tables from page 24. Had chosen a 225 teeth belt, it means that the corresponding $z_c - z_1$ is 185, and having $z_2 - z_1 = 80 - 40 = 40$, we have a c_t of 82.254 (page 34). Multiplying this value by the pitch length, we will have the centre distance:

$$c = p \cdot c_t = 8 \cdot 82{,}254 = 658{,}032 \text{ mm}$$

Now we must check if the belt's number of teeth is not an integer multiple of the pulleys' number of teeth:

$$z_c / z_1 = 225 / 40 = 5{,}625 \qquad z_c / z_2 = 225 / 80 = 2{,}8125$$

These numbers are not integer, so they are acceptable.

DETERMINATION OF THE ACTUAL POWER RATING (GOLD8)

To get P_{ba} we have to find out:

- P_b = 11.20 kW from table at page 73 knowing z_1 (40) and n_1 (1000 1/min).
- C_d comes from the teeth in mesh number:

$$z_m = \left\{0{,}5 - \left[\frac{4\,p}{79\,c} \cdot (z_1 + z_s)\right]\right\} \cdot z_s =$$

$$= \left\{0{,}5 - \left[\frac{4 \cdot 8}{79 \cdot 658{,}032} \cdot (80 - 40)\right]\right\} \cdot 40 = 19{,}01$$

This means that there are more than 6 teeth mesh, so we can consider $C_d = 1$.

- K_1 comes from the belt length; because the chosen belt is 1800 mm long and has pitch 8 mm, K_1 is 1,20 (table 6 page 12).

So: $$P_{ba} = P_b \cdot C_d \cdot K_1 = 11{,}20 \cdot 1 \cdot 1{,}20 = 13{,}44 \text{ kW}$$

DETERMINATION OF BELT WIDTH (GOLD8)

Now we can find the width coefficient C_w:

$$C_w = \frac{P_c}{P_{ba}} = \frac{50}{13{,}44} = 3{,}72$$

The closest upper value in table $C_{w,listed}$ is 4,25, (table 7 page 13) corresponding to 85 mm of width.
The final belt will be 1800GOLD8M85, with driver pulley's number of teeth equal to 40 and driven pulley's number of teeth equal to 80. The calculated centre distance is 658,032 mm.

The "Drive Safety Factor" can be calculated with the following formula:

$$\sigma = \frac{P_{ba} \cdot C_{w,listed}}{P_c} = \frac{13{,}44 \cdot 4{,}25}{50} = 1{,}14$$

PRE-TENSIONING (GOLD8)
To get the right pretension on this belt we need to know:

- K_m = 1,75 because engine class is C;
- $v = \frac{d_1 \cdot n_i}{19100} = \frac{101,86 \cdot 1000}{19100} = 5,33$ m/s;
- m_l is listed according to kind of belt, pitch and width; in this case it is 0,467 kg/m (table 9 page 15).

Because of these values, we will have:

$$T_s = \frac{500 \cdot P \cdot K_m}{v} + (m_l \cdot v^2) = \frac{500 \cdot 25 \cdot 1,75}{5,33} + (0,467 \cdot 5,33^2) = 4117 \text{ N}$$

SECOND OPTION
As previously written, it can be useful to compare more than one option. For example, choosing a GOLD14 we expect a narrower belt.

CHOICE OF PULLEY, BELT AND CENTRE DISTANCE (GOLD14)
Because of the maximum allowed pulley dimension, $z_{2,\,max}$ we can choose is

$$z_{2,max} = \frac{d_{2,max} \cdot \pi}{p} = \frac{250 \cdot 3,14}{14} \approx 56$$

Selecting from table at page 10, considering i = 2, a good combination option can be to use z_1 = 28 and z_2 = 56, that is less than $z_{2,max}$, with respectively d_1 = 124,78 and d_2 = 249,55 mm.

Because centre distance has to be 650 mm, we will firstly calculate the approximate belt length:

$$L \approx 2\,c + 1,57\,(d_1 + d_2) + \frac{(d_2 - d_1)^2}{4\,c} =$$

$$= 2 \cdot 650 + 1,57 \cdot (124,78 + 249,55) + \frac{(249,55 - 124,78)^2}{4 \cdot 650} = 1893,69 \text{ mm}$$

In our range we have 1890 mm long available length L_c, that is very close to the needed one. It has 135 teeth.
The actual centre distance can be calculated:

- By the formula

$$c = \frac{1}{4}\left\{L_c - \frac{p}{2}(z_1+z_2) + \sqrt{[L_c - \frac{p}{2}(z_1+z_2)]^2 - 2\,[\frac{p}{\pi}(z_2-z_1)]^2}\right\} =$$

$$= \frac{1}{4}\left\{1890 - \frac{14}{2}(28+56) + \sqrt{[1890 - \frac{14}{2}(28+56)]^2 - 2\,[\frac{14}{\pi}(56-28)]^2}\right\} = 647,997 \text{ mm}$$

- Using the tables from page 24. Had chosen a 135 teeth belt, it means that the chosen $z_c - z_1$ is 107, and having $z_2 - z_1 = 56 - 28 = 28$, we have c_t of 46.286 (page 29). Multiplying this value by the pitch length, we will have the centre distance:

$$c = p \cdot c_t = 14 \cdot 46,286 = 648,004 \text{ mm}$$

Now we must check if the belt's number of teeth is not an integer multiple of the pulleys' number of teeth:

$$z_c / z_1 = 135 / 28 = 4,82 \qquad z_c / z_2 = 135 / 56 = 2,41$$

These numbers are not integer, so they are acceptable.

CALCULATION EXAMPLE

DETERMINATION OF THE ACTUAL POWER RATING (GOLD14)

To get P_{ba} we have to find out:

- P_b = 48,56 kW from table at page 74 knowing z_1 (28) and n_1 (1000 1/min).
- C_d comes from the teeth in mesh number:

$$z_m = \left\{0{,}5 - \left[\frac{4\ p}{79\ c}(z_l - z_s)\right]\right\} \bullet z_s = \left\{0{,}5 - \left[\frac{4 \bullet 14}{79 \bullet 648{,}004} \bullet (56 - 28)\right]\right\} \bullet 28 = 13{,}14$$

This means that there are more than 6 teeth mesh, so we can consider $C_d = 1$

- K_1 comes from the belt length; because the chosen belt is 1890 mm long and has pitch 14 mm, K_1 is 0,95 (table 6 page 12).

So:
$$P_{ba} = P_b \bullet C_d \bullet K_1 = 48{,}56 \bullet 1 \bullet 0{,}95 = 46{,}13 \text{ kW}$$

DETERMINATION OF BELT WIDTH (GOLD14)

Now we can find the width coefficient C_w:

$$C_w = \frac{P_c}{P_{ba}} = \frac{50}{46{,}13} = 1{,}08$$

The closest upper value $C_{w,\ listed}$ is 1,375 (table 7 page 13), corresponding to 55 mm of width.
The final belt will be 1890GOLD14M55, with driver pulley's number of teeth equal to 28 and driven pulley's number of teeth equal to 56. The calculated centre distance is 648.004 mm.
The "Drive Safety Factor" can be calculated with the following formula:

$$\sigma = \frac{P_{ba} \bullet C_{w,listed}}{P_c} = \frac{46{,}13 \bullet 1{,}375}{50} = 1{,}26$$

PRE-TENSIONING (GOLD14)

To get the right pretension on this belt we need to know:

- Km = 1,75 because engine class is C;
- $v = \frac{d_1 \bullet n_i}{19100} = \frac{124{,}78 \bullet 1000}{19100} = 6{,}53$ m/s
- m_l is listed according to kind of belt, pitch and width; in this case it is 0,556 kg/m (table 9 page 15).

Because of these values, we will have:

$$T_s = \frac{500 \bullet P \bullet K_m}{v} + (m_l \times v^2) = \frac{500 \bullet 25 \bullet 1{,}75}{6.53} + (0{,}556 \bullet 6{,}53\ \ ) = 3374 \text{ N}$$

THIRD OPTION

Now we just want to evaluate a SILVER14, that has a smaller power rating than GOLD14.

Geometrics and layout are the same as per GOLD14, so we can choose the same pulleys, the same belt length and the same centre distance already chosen for GOLD14. The main difference is about the power rating P_b.

DETERMINATION OF THE ACTUAL POWER RATING (SILVER14)

To get P_{ba} we have to find out:

- P_b = 24,96 kW from table at page 68 knowing z_1 and n_1.
- C_d = 1 as per GOLD14.
- K_1 is 0,95 as per GOLD14.

So: $$P_{ba} = P_b \cdot C_d \cdot K_1 = 24{,}96 \cdot 1 \cdot 0{,}95 = 23{,}71 \text{ kW}$$

DETERMINATION OF BELT WIDTH (SILVER14)

Now we can find the width coefficient C_w:

$$C_w = \frac{P_c}{P_{ba}} = \frac{50}{23{,}71} = 2{,}11$$

The closest upper value $C_{w,\,listed}$ is 2,125 (table 7 page 13), corresponding to 85 mm of width.

The final belt will be 1890SILVER14M85, with driver pulley's number of teeth equal to 28 and driven pulley's number of teeth equal to 56. The calculated centre distance is 648,004 mm.

The "Drive Safety Factor" can be calculated with the following formula:

$$\sigma = \frac{P_{ba} \cdot C_{w,listed}}{P_c} = \frac{23{,}71 \cdot 2{,}125}{50} = 1{,}007$$

PRE-TENSIONING (SILVER14)

To get the right pretension on this belt we need to know:

- K_m = 1,75 because engine class is C;
- v = 6,53m/s as per GOLD14
- m_l is listed according to kind of belt, pitch and width; in this case it is 0,850 kg/m.

Because of these values, we will have:

$$T_s = \frac{500 \cdot P \cdot K_m}{v} (+ m_l \cdot v^2) = \frac{500 \cdot 25 \cdot 1{,}75}{6{,}53} + (0{,}850 \cdot 6{,}53^2) = 3386 \text{ N}$$

THREE OPTIONS COMPARISON

The three options can grant similar performances even with different features.
GOLD14 will grant a narrower belt, that means narrower pulleys and less noise. Moreover, in this case we can also appreciate a smaller required tensioning compared to GOLD8, that will stress less all the machine components (shafts, bearings, etc.) or can allow a "lighter" sizing of them. This is also due to the fact that pulleys have bigger diameters.
On the other side GOLD8 can be fitted on smaller pulleys (even in our example it is not an issue).
If we compare GOLD14 and SILVER14, we can see how wider than GOLD14 a SILVER14 has to be to get the same result. So SILVER14 will require wider pulleys and will give more noise than a GOLD14 because of the different widths.
All of these options will also have different cost levels.
For more details or any assistance, please contact our offices.

BELT INSTALLATION

To correctly install the belts, you have to reduce the centre distance between the pulleys' axes or to loose the idler. If this axes are fixed or there is not enough idler's run, you have to take apart the pulleys, then to put the pulley inside the inner part of the belt and, finally, re-install the pulleys. Sometimes, to take apart just one pulley could be enough.
Moreover, it is important to follow the following rules:

- Pulleys are properly aligned and axes very parallel;
- Avoid to force the belt on the pulley, even using tools; it might lead to cord cracks, that could be not visible.
- Be sure that axes are properly set up to avoid variation on the centre distance, pulley misalignment or not parallelism between the axes themselves.
- Install the belt with the proper tension.

Always mind that a low tensioned belt could lead to teeth jump, early wearing and vibrations; an over-tensioned belt could lead to early wearing and high noise.

FORCES ON AXES AND BEARINGS

The dynamic axial load is obtained by a vector addition between the tension in the tight span T_1 and the one in the slack span T_2 as shown in the below image 2. To calculate the dynamic axial load $F_{a,\,dyn}$ you can use the following formula:

$$F_{a,\,dyn} = \sqrt{T_1^2 + T_2^2 - 2\,T_1 T_2 \cos\beta} = \sqrt{\frac{T_e^2}{2} + T_s^2 - 2\cos\beta\left(T - \frac{T_s^2}{4}\right)}$$

where:

- $T_e = \dfrac{1000 \bullet P}{v}$ with P the engine power in kW and v the belt speed in m/s;
- T_s is the belt's pretension as previously calculated (page 14);
- β is the wrap angle as previusly calculated (page 14).

Knowing the load on the axis, it is now possible to calculate the load on the bearings according to the following formulas:

- If you have a system like image 3, where pulley is set outside the bearing's support:

$$F_1 = \frac{L_1 - L_2}{L_2} \bullet F_{a,\,dyn} \qquad F_2 = \frac{L_1}{L_2} \bullet F_{a,\,dyn}$$

- If you have a system like image 4, where the pulley is between the two bearings:

$$F_1 = \frac{L_2 - L_1}{L_2} \bullet F_{a,\,dyn} \qquad F_2 = \frac{L_1}{L_2} \bullet F_{a,\,dyn}$$

where:

- F_1 and F_2 are the loads in N on the two bearings;
- L_1 is the distance between the pulley and the bearing;
- L_2 is the distance between the two bearings;

Symbol	Unit	Definition	Symbol	Unit	Definition
α	°	Free span lenght angle	L_2	mm	Distance between the bearings
β	°	Wrap angle on small pulley	M_1	Nm	Motor torque
d_1	mm	Driver pulley pitch diameter	M_2	Nm	Absorbed torque
d_2	mm	Driven pulley pitch diameter	P	kW	Motor power
$F_{a,\,dyn}$	N	Dynamic axial load	P_a	kW	Absorberd power
F_1	N	Load on bearing 1	T_1	N	Tight span tension
F_2	N	Load on bearing 2	T_2	N	Slack span tension
L_1	mm	Distance between bearing and pulley			

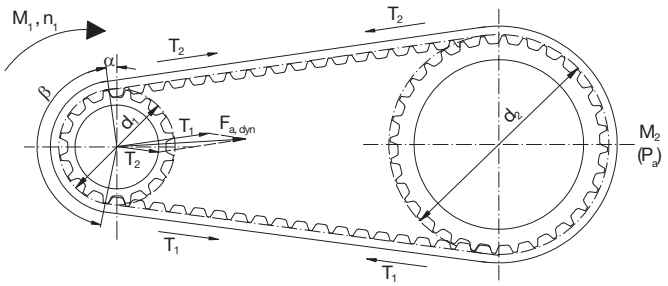

Image 2

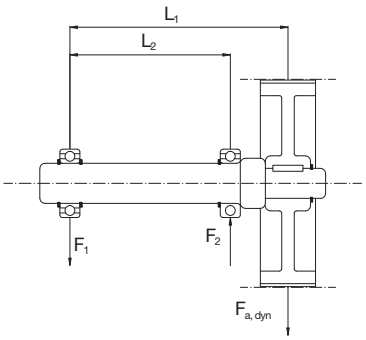

Image 3

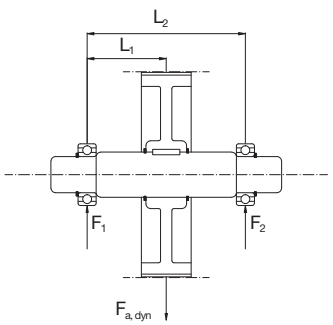

Image 4

CAUSES OF BELT FAILURE

To ensure that the performance and durability of a toothed belt drive will fully meet the requirements of particular application, it is necessary firstly to accurately select the drive and then to make sure the drive is correctly installed. If this procedure is not followed, the drive life and efficiency may be considerably reduced. The most frequent problems encountered, together with their probable causes, are listed in the table below. We hope that this will serve as a useful quick-reference quide, but if the drive problems persist or they are not identified in the following list please consult Megadine's Application Department

Problems	Causes	Corrective action
Abnormal wear of the belt 1. On side of tooth	• Belt excessively taut • Excessive overloading • Incorrect contour or diameteter of pulley	• Reduce centre distance • Use a wider belt • Replace pulley after checking contour or diameter
2. On the bottom of the tooth	• Exessive installation tension	• Reduce centre distance
3. At the tooth root	• Incorrect diameter of pulley	• Replace pulley after checking diameter
4. On the side of the belt	• Incorrect contour or diameter of pulley • Misalignment or wrong setting of pulley • Oscillation of axes and/or of bearing • Flanges bent	• Replace pulley after checking diameter • Replace pulley after checking diameter • Correct the positioning of the pulley and reinforce the bearing • Straighten flanges
Failure through traction or laceration of teeth	• Diameter of small pulley i.e. below the minimum • Excessive moisture	• Increase the diameter of the pulley or use belt and pulleys of smaller pitch • Eliminate the moisture
Laceration of the belt	• Number of teeth in mesh less than six • Excessive load	• Increase the number of teeth in mesh or use belts and pulley of smaller pitch • Use a wider belt
Rupture of tensile member	• Excessive load • Diameter of pulley below minimum	• Use a wider belt • Increase the diameter of the pulleys
Breaks or cracks in the top surface of the belt	• Exposure to excessive low temperatures (below -25°C)	• Eliminate the low temperature
Softening of the surface of the belt	• Exposure to excessive temperatures (over +85°C) or operation with excessive amount of oil present	• Eliminate the high temperature or reduce the amount of oil present
Apparent elongation of the belt	• Reduction of centre distance due to bearings not being firmly fixed	• Restore the initial centre distance and strengthen the bearings
Belt overriding the flanges	• Faulty installation of the flanges • Misalignment of pulley	• Reinstall the flanges properly • Align pulley
Excessive wear of pulley teeth	• Excessive overloading • Belt excessively taut • Pulley material insufficiently hard	• Use a wider belt • Reduce the centre distance • Harden the pulley surface
Drive excessively noisy	• Pulley out of line • Excessive installation tension • Excessive load • Diameter of pulley below minimum	• Align pulley • Reduce the centre distance • Harden the pulley surface • Increase the diameter of the pulleys

CENTRE DISTANCE TABLE

$z_2 - z_1$ \ $z_c - z_1$	7	8	9	10	11	12	13	14	15	16	17	18	19	20	21
1	3,247	3,747	4,248	4,747	5,248	5,748	6,248	6,749	7,249	7,749	8,249	8,749	9,249	9,749	10,249
2		3,486	3,988	4,489	4,990	5,491	5,992	6,493	6,993	7,494	7,994	8,495	8,995	9,495	9,995
3			3,720	4,223	4,726	5,229	5,731	6,232	6,734	7,235	7,736	8,237	8,737	9,238	9,739
4				3,949	4,455	4,960	5,463	5,966	6,469	6,971	7,473	7,975	8,477	8,978	9,479
5					4,174	4,682	5,189	5,694	6,199	6,703	7,206	7,709	8,212	8,714	9,216
6						4,396	4,907	5,416	5,923	6,429	6,934	7,439	7,943	8,446	8,949
7							4,615	5,128	5,610	6,149	6,657	7,164	7,669	8,174	8,679
8							4,311	4,831	5,348	5,861	6,372	6,882	7,391	7,898	8,404
9								4,521	5,045	5,565	6,080	6,594	7,106	7,615	8,124
10									4,730	5,257	5,779	6,298	6,814	7,327	7,838
11										4,936	5,467	5,993	6,514	7,031	7,546
12											5,141	5,676	6,204	6,728	7,247
13												5,345	5,883	6,414	6,940
14													5,547	6,088	6,622
15														5,747	6,292
16															5,946

$z_2 - z_1$ \ $z_c - z_1$	22	23	24	25	26	27	28	29	30	31	32	33	34	35	36
1	10,749	11,249	11,749	12,249	12,749	13,250	13,750	14,250	14,750	15,250	15,750	16,250	16,750	17,250	17,750
2	10,496	10,996	11,496	11,996	12,496	12,997	13,497	13,997	14,497	14,997	15,497	15,997	16,497	16,997	17,498
3	10,239	10,740	11,240	11,741	12,241	12,742	13,242	13,742	14,242	14,743	15,243	15,743	16,243	16,744	17,244
4	9,980	10,481	10,982	11,483	11,984	12,484	12,985	13,485	13,986	14,486	14,987	15,487	15,988	16,488	16,989
5	9,718	10,219	10,721	11,222	11,723	12,225	12,726	13,227	13,727	14,228	14,729	15,230	15,730	16,231	16,731
6	9,452	9,955	10,457	10,959	11,461	11,962	12,464	12,965	13,467	13,968	14,469	14,970	15,471	15,972	16,473
7	9,183	9,689	10,190	10,692	11,195	11,697	12,200	12,702	13,203	13,705	14,207	14,708	15,210	15,771	16,212
8	8,909	9,414	9,919	10,423	10,926	11,429	11,932	12,435	12,938	13,440	13,942	14,444	14,946	15,448	15,950
9	8,631	9,138	9,644	10,149	10,654	11,158	11,662	12,166	12,669	13,173	13,675	14,178	14,681	15,183	15,685
10	8,348	8,857	9,365	9,872	10,378	10,884	11,389	11,894	12,398	12,902	13,406	13,909	14,413	14,916	15,418
11	8,060	8,571	9,081	9,590	10,098	10,606	11,112	11,618	12,124	12,629	13,134	13,638	14,142	14,646	15,149
12	7,764	8,279	8,792	9,304	9,814	10,323	10,832	11,339	11,846	12,353	12,858	13,364	13,869	14,373	14,878
13	7,462	7,981	8,497	9,012	9,525	10,036	10,547	11,056	11,565	12,073	12,580	13,087	13,593	14,098	14,604
14	7,150	7,675	8,196	8,714	9,230	9,745	10,258	10,769	11,280	11,789	12,298	12,806	13,314	13,820	14,327
15	6,829	7,360	7,886	8,409	8,929	9,447	9,963	10,477	10,990	11,502	12,012	12,522	13,031	13,539	14,047
16	6,495	7,034	7,568	8,097	8,622	9,144	9,663	10,180	10,696	11,210	11,723	12,234	12,745	13,225	13,764
17	6,145	6,696	7,239	7,775	8,306	8,833	9,356	9,878	10,396	10,913	11,429	11,943	12,455	12,967	13,478
18		6,342	6,896	7,442	7,981	8,514	9,043	9,568	10,091	10,611	11,130	11,646	12,161	12,675	13,188
19			6,537	7,095	7,644	8,185	8,720	9,251	9,779	10,303	10,825	11,345	11,863	12,379	12,894
20				6,732	7,294	7,845	8,388	8,926	9,459	9,988	10,515	11,038	11,559	12,079	12,596
21				6,348	6,927	7,491	8,045	8,591	9,131	9,666	10,198	10,725	11,250	11,773	12,293
22					6,538	7,120	7,688	8,245	8,793	9,335	9,873	10,406	10,935	11,461	11,985
23						6,727	7,313	7,884	8,443	8,994	9,539	10,078	10,613	11,144	11,672
24							6,915	7,505	8,079	8,641	9,195	9,742	10,282	10,819	11,352
25								7,103	7,697	8,273	8,839	9,395	9,943	10,486	11,024
26									7,291	7,887	8,468	9,035	9,593	10,144	10,689
27										7,477	8,078	8,661	9,231	9,791	10,344
28											7,664	8,267	8,853	9,426	9,989
29												7,850	8,456	9,045	9,620
30													8,035	8,645	9,236
31														8,219	8,833
32															8,404

CENTRE DISTANCE TABLE

$z_2 - z_1$ \ $z_c - z_1$	37	38	39	40	41	42	43	44	45	46	47	48	49	50	51
1	18,250	18,750	19,250	19,750	20,250	20,750	21,250	21,750	22,250	22,750	23,250	23,750	24,250	24,750	25,250
2	17,998	18,498	18,998	19,498	19,998	20,498	20,998	21,498	21,998	22,498	22,998	23,498	23,998	24,498	24,998
3	17,744	18,244	18,744	19,245	19,745	20,245	20,745	21,245	21,745	22,245	22,745	23,246	23,746	24,246	24,746
4	17,489	17,989	18,489	18,990	19,490	19,990	20,491	20,991	21,491	21,991	22,491	22,992	23,492	23,992	24,492
5	17,232	17,733	18,233	18,734	19,234	19,734	20,235	20,735	21,236	21,736	22,236	22,737	23,237	23,737	24,237
6	16,974	17,474	17,975	18,476	18,976	19,477	19,978	20,478	20,979	21,479	21,980	22,480	22,981	23,481	23,981
7	16,713	17,214	17,715	18,216	18,717	19,218	19,719	20,220	20,721	21,221	21,722	22,223	22,723	23,224	23,724
8	16,451	16,953	17,454	17,955	18,457	18,958	19,459	19,960	20,461	20,962	21,463	21,964	22,464	22,965	23,466
9	16,187	16,689	17,191	17,692	18,194	18,696	19,197	19,698	20,200	20,701	21,202	21,703	22,204	22,705	23,206
10	15,921	16,423	16,926	17,428	17,930	18,432	18,934	19,435	19,937	20,438	20,940	21,441	21,943	22,444	22,945
11	15,652	16,156	16,658	17,161	17,664	18,166	18,668	19,170	19,673	20,174	20,676	21,178	21,680	22,181	22,683
12	15,382	15,886	16,389	16,892	17,396	17,898	18,401	18,904	19,406	19,909	20,411	20,913	21,415	21,917	22,419
13	15,109	15,613	16,117	16,622	17,125	17,629	18,132	18,635	19,139	19,641	20,144	20,647	21,149	21,652	22,154
14	14,833	15,338	15,844	16,348	16,853	17,357	17,861	18,365	18,869	19,372	19,875	20,379	20,881	21,384	21,887
15	14,554	15,061	15,567	16,073	16,578	17,083	17,588	18,093	18,597	19,101	19,605	20,109	20,612	21,115	21,618
16	14,273	14,781	15,288	15,795	16,301	16,807	17,313	17,818	18,323	18,828	19,333	19,837	20,341	20,845	21,348
17	13,988	14,497	15,006	15,514	16,021	16,529	17,035	17,541	18,047	18,553	19,058	19,563	20,068	20,572	21,077
18	13,700	14,211	14,721	15,230	15,739	16,247	16,755	17,262	17,769	18,275	18,782	19,287	19,793	20,298	20,803
19	13,408	13,921	14,433	14,943	15,454	15,963	16,472	16,980	17,488	17,996	18,503	19,009	19,516	20,022	20,527
20	13,112	13,627	14,141	14,653	15,165	15,676	16,186	16,696	17,205	17,714	18,222	18,729	19,236	19,743	20,250
21	12,812	13,329	13,845	14,360	14,873	15,386	15,898	16,409	16,919	17,429	17,938	18,447	18,955	19,463	19,970
22	12,507	13,027	13,545	14,062	14,578	15,092	15,606	16,119	16,630	17,142	17,652	18,162	18,671	19,180	19,688
23	12,197	12,720	13,241	13,761	14,279	14,795	15,311	15,825	16,339	16,851	17,363	17,874	18,385	18,895	19,404
24	11,881	12,408	12,932	13,455	13,975	14,494	15,012	15,528	16,044	16,558	17,071	17,584	18,096	18,607	19,118
25	11,559	12,090	12,618	13,143	13,667	14,189	14,709	15,228	15,745	16,261	16,776	17,291	17,804	18,317	18,828
26	11,229	11,765	12,297	12,827	13,354	13,879	14,402	14,923	15,443	15,961	16,478	16,994	17,509	18,023	18,537
27	10,891	11,433	11,971	12,505	13,036	13,564	14,090	14,614	15,136	15,657	16,176	16,694	17,211	17,727	18,242
28	10,544	11,093	11,636	12,175	12,711	13,243	13,773	14,300	14,826	15,349	15,871	16,391	16,910	17,428	17,944
29	10,186	10,743	11,293	11,839	12,380	12,917	13,451	13,981	14,510	15,036	15,561	16,084	16,605	17,125	17,643
30	9,814	10,382	10,941	11,494	12,041	12,583	13,122	13,657	14,189	14,719	15,247	15,772	16,296	16,818	17,339
31	9,427	10,008	10,577	11,139	11,693	12,242	12,766	13,326	13,863	14,396	14,927	15,456	15,983	16,507	17,031
32	9,020	9,617	10,200	10,772	11,336	11,892	12,443	12,989	13,530	14,068	14,603	15,135	15,665	16,193	16,719
33	8,587	9,207	9,807	10,392	10,966	11,532	12,090	12,642	13,190	13,733	14,273	14,809	15,342	15,873	16,402
34		8,770	9,393	9,996	10,584	11,160	11,728	12,288	12,842	13,392	13,936	14,477	15,014	15,549	16,081
35			8,953	9,579	10,185	10,775	11,354	11,923	12,485	13,042	13,592	14,138	14,680	15,219	15,755
36				9,136	9,765	10,373	10,966	11,547	12,118	12,683	13,240	13,792	14,340	14,883	15,423
37					9,318	9,950	10,561	11,156	11,739	12,313	12,879	13,438	13,992	14,541	15,086
38						9,500	10,135	10,749	11,346	11,932	12,508	13,075	13,636	14,191	14,741
39							9,682	10,320	10,936	11,536	12,124	12,701	13,270	13,833	14,390
40								9,863	10,504	11,123	11,725	12,315	12,894	13,465	14,030
41									10,044	10,688	11,310	11,914	12,506	13,087	13,660
42										10,225	10,872	11,496	12,102	12,696	13,279
43											10,406	11,055	11,681	12,290	12,886
44												10,586	11,238	11,867	12,478
45													10,765	11,420	12,052
46														10,945	11,603
47															11,124
48															

CENTRE DISTANCE TABLE

$z_2 - z_1$	$z_c - z_1$														
	52	53	54	55	56	57	58	59	60	61	62	63	64	65	66
1	25,750	26,250	26,750	27,250	27,750	28,250	28,750	29,250	29,750	30,250	30,750	31,250	31,750	32,250	32,750
2	25,498	25,999	26,499	26,999	27,499	27,999	28,499	28,999	29,499	29,999	30,499	30,999	31,499	31,999	32,499
3	25,246	25,746	26,246	26,746	27,246	27,746	28,246	28,746	29,247	29,747	30,247	30,747	31,247	31,747	32,247
4	24,992	25,493	25,993	26,493	26,993	27,493	27,993	28,493	28,993	29,494	29,994	30,494	30,994	31,494	31,994
5	24,738	25,238	25,738	26,238	26,739	27,239	27,739	28,239	28,739	29,240	29,740	30,240	30,740	31,240	31,740
6	24,482	24,982	25,483	25,983	26,483	26,984	27,484	27,984	28,484	28,985	29,485	29,985	30,486	30,986	31,486
7	24,225	24,725	25,226	25,726	26,227	26,727	27,228	27,728	28,228	28,729	29,229	29,730	30,230	30,730	31,231
8	23,967	24,467	24,968	25,469	25,969	26,470	26,970	27,471	27,971	28,472	28,972	29,473	29,973	30,474	30,974
9	23,707	24,208	24,709	25,210	25,711	26,211	26,712	27,213	27,713	28,214	28,715	29,215	29,716	30,217	30,717
10	23,446	23,948	24,449	24,950	25,451	25,952	26,453	26,953	27,454	27,955	28,456	28,957	29,457	29,958	30,459
11	23,184	23,686	24,187	24,688	25,190	25,691	26,192	26,693	27,194	27,695	28,196	28,697	29,198	26,699	30,200
12	22,921	23,423	23,924	24,426	24,927	25,429	25,930	26,431	26,933	27,434	27,935	28,436	28,937	29,438	29,940
13	22,656	23,158	23,660	24,162	24,664	25,165	25,667	26,169	26,670	27,172	27,673	28,174	28,676	29,177	29,678
14	22,389	22,892	23,394	23,896	24,399	24,901	25,403	25,905	26,406	26,908	27,410	27,911	28,413	28,915	29,416
15	22,122	22,624	23,127	23,630	24,132	24,635	25,137	25,639	26,141	26,643	27,145	27,647	28,149	28,651	29,153
16	21,852	22,355	22,858	23,362	23,864	24,367	24,870	25,373	25,875	26,377	26,880	27,382	27,884	28,386	28,888
17	21,581	22,085	22,588	23,092	23,595	24,098	24,602	25,105	25,607	26,110	26,613	27,115	27,618	28,120	28,622
18	21,308	21,812	22,316	22,820	23,324	23,828	24,332	24,835	25,338	25,842	26,345	26,847	27,350	27,853	28,356
19	21,033	21,538	22,043	22,547	23,052	23,556	24,060	24,564	25,068	25,571	26,075	26,578	27,081	27,585	28,088
20	20,756	21,262	21,767	22,273	22,778	23,283	23,787	24,292	24,796	25,300	25,804	26,308	26,811	27,315	27,818
21	20,477	20,984	21,490	21,996	22,502	23,007	23,512	24,018	24,522	25,027	25,531	26,036	26,540	27,044	27,547
22	20,196	20,704	21,211	21,718	22,224	22,730	23,236	23,742	24,247	24,752	25,257	25,762	26,267	26,771	27,275
23	19,913	20,421	20,930	21,437	21,944	22,451	22,958	23,464	23,970	24,476	24,982	25,487	25,992	26,497	27,002
24	19,628	20,137	20,646	21,155	21,663	22,171	22,678	23,185	23,692	24,198	24,705	25,211	25,716	26,222	26,727
25	19,340	19,850	20,360	20,870	21,379	21,888	22,396	22,904	23,412	23,919	24,426	24,932	25,439	25,945	26,451
26	19,049	19,561	20,072	20,583	21,093	21,603	22,112	22,621	23,129	23,637	24,145	24,652	25,159	25,666	26,173
27	18,756	19,269	19,782	20,294	20,805	21,316	21,826	22,336	22,845	23,354	23,862	24,371	24,878	25,386	25,893
28	18,460	18,975	19,489	20,002	20,514	21,026	21,538	22,049	22,559	23,069	23,578	24,087	24,596	25,104	25,642
29	18,161	18,677	19,193	19,707	20,221	20,735	21,247	21,759	22,270	22,781	23,292	23,802	24,311	24,820	25,329
30	17,858	18,377	18,894	19,410	19,926	20,440	20,954	21,467	21,980	22,492	23,003	23,514	24,024	24,534	25,044
31	17,552	18,073	18,592	19,110	19,627	20,143	20,658	21,173	21,687	22,200	22,712	23,224	23,736	24,247	24,757
32	17,243	17,765	18,287	18,807	19,325	19,843	20,360	20,876	21,391	21,906	22,419	22,933	23,445	23,957	24,468
33	16,929	17,454	17,978	18,500	19,021	19,540	20,059	20,576	21,093	21,609	22,124	22,638	23,152	23,665	24,178
34	16,611	17,139	17,665	18,189	18,712	19,234	19,755	20,274	20,792	21,310	21,826	22,342	22,857	23,371	23,885
35	16,288	16,819	17,348	17,875	18,401	18,925	19,447	19,968	20,488	21,007	21,526	22,043	22,559	23,075	23,590
36	15,961	16,495	17,027	17,557	18,085	18,611	19,136	19,659	20,182	20,702	21,222	21,741	22,259	22,776	23,292
37	15,627	16,166	16,701	17,234	17,765	18,294	18,821	19,347	19,871	20,394	20,916	21,436	21,956	22,474	22,992
38	15,288	15,830	16,370	16,907	17,441	17,973	18,503	19,031	19,558	20,083	20,606	21,129	21,650	22,170	22,690
39	14,942	15,489	16,033	16,574	17,112	17,647	18,180	18,711	19,240	19,768	20,294	20,818	21,341	21,863	22,384
40	14,588	15,141	15,690	16,236	16,777	17,316	17,853	18,387	18,919	19,449	19,977	20,504	21,029	21,553	22,076
41	14,226	14,786	15,340	15,891	16,437	16,980	17,521	18,058	18,593	19,126	19,657	20,186	20,714	21,240	21,765
42	13,854	14,422	14,983	15,539	16,091	16,639	17,183	17,724	18,263	18,799	19,333	19,865	20,395	20,923	21,450
43	13,471	14,048	14,617	15,180	15,737	16,291	16,840	17,385	17,928	18,467	19,004	19,539	20,072	20,603	21,132
44	13,076	13,663	14,241	14,812	15,376	15,935	16,490	17,040	17,587	18,130	18,671	19,209	19,745	20,279	20,811
45	12,665	13,265	13,854	14,434	15,006	15,572	16,133	16,689	17,240	17,788	18,333	18,875	19,414	19,951	20,485
46	12,237	12,852	13,454	14,045	14,627	15,201	15,768	16,330	16,887	17,440	17,989	18,535	19,078	19,618	20,156
47	11,784	12,420	13,039	13,642	14,235	14,818	15,394	15,963	16,527	17,085	17,639	18,189	18,736	19,280	19,821
48	11,303	11,966	12,605	13,225	13,831	14,425	15,010	15,587	16,158	16,723	17,283	17,838	18,390	18,938	19,482
49		11,482	12,148	12,789	13,411	14,019	14,615	15,202	15,781	16,353	16,919	17,480	18,037	18,589	19,138
50			11,660	12,329	12,972	13,597	14,207	14,805	15,394	15,974	16,547	17,115	17,677	18,235	18,788
51			11,131	11,839	12,510	13,155	13,782	14,394	14,994	15,584	16,166	16,741	17,310	17,874	18,432
52				11,307	12,017	12,691	13,339	13,967	14,582	15,183	15,775	16,358	16,935	17,505	18,070
53					11,482	12,195	12,871	13,521	14,153	14,768	15,372	15,965	16,550	17,128	17,699
54						11,656	12,372	13,051	13,704	14,337	14,955	15,560	16,155	16,742	17,321
55							11,831	12,550	13,232	13,887	14,522	15,141	15,748	16,345	16,933
56								12,006	12,728	13,412	14,069	14,706	15,327	15,936	16,534
57									12,180	12,905	13,591	14,251	14,890	15,513	16,123
58										12,355	13,082	13,771	14,432	15,073	15,699
59											12,529	13,259	13,950	14,614	15,257
60												12,702	13,435	14,129	14,795

CENTRE DISTANCE TABLE

$z_2 - z_1$ \ $z_c - z_1$	67	68	69	70	71	72	73	74	75	76	77	78	79	80	81
1	33,250	33,750	34,250	34,750	35,250	35,750	36,250	36,750	37,250	37,750	38,250	38,750	39,250	39,750	40,250
2	32,999	33,499	33,999	34,499	34,999	35,499	35,999	36,499	36,999	37,499	37,999	38,499	38,999	39,499	39,999
3	32,747	33,247	33,747	34,247	34,747	35,247	35,747	36,247	36,747	37,247	37,747	38,247	38,748	39,248	39,748
4	32,494	32,994	33,494	33,994	34,495	34,995	35,495	35,995	36,495	36,995	37,495	37,995	38,495	38,995	39,495
5	32,241	32,741	33,241	33,741	34,241	34,741	35,241	35,742	36,242	36,742	37,242	37,742	38,242	38,742	39,242
6	31,986	32,486	32,987	33,487	33,987	34,487	34,987	35,488	35,988	36,488	36,988	37,488	37,988	38,489	38,989
7	31,731	32,231	32,732	33,232	33,732	34,232	34,733	35,233	35,733	36,233	36,734	37,234	37,734	38,234	38,734
8	31,475	31,975	32,475	32,976	33,476	33,977	34,477	34,977	35,478	35,978	36,478	36,979	37,479	37,979	38,479
9	31,218	31,718	32,219	32,719	33,220	33,720	34,220	34,721	35,221	35,722	36,222	36,723	37,223	37,723	38,224
10	30,960	31,460	31,961	32,461	32,962	33,463	33,963	34,464	34,964	35,465	35,965	36,466	36,966	37,467	37,967
11	30,701	31,201	31,702	32,203	32,704	33,204	33,705	34,206	34,706	35,207	35,708	36,208	36,709	37,209	37,710
12	30,441	30,941	31,442	31,943	32,444	32,945	33,446	33,947	34,448	34,948	35,449	35,950	36,450	36,951	37,452
13	30,179	30,681	31,182	31,683	32,184	32,685	33,186	33,687	34,188	34,689	35,190	35,690	36,191	36,692	37,193
14	29,917	30,419	30,920	31,421	31,923	32,424	32,925	33,426	33,927	34,428	34,929	35,430	35,931	36,432	36,933
15	29,654	30,156	30,657	31,159	31,660	32,162	32,663	33,165	33,666	34,167	34,668	35,169	35,671	36,172	36,673
16	29,390	29,892	30,394	30,895	31,397	31,899	32,400	32,902	33,403	33,905	34,406	34,908	35,409	35,910	36,411
17	29,125	29,627	30,129	30,631	31,133	31,635	32,136	32,638	33,140	33,642	34,143	34,645	35,146	35,648	36,149
18	28,858	29,361	29,863	30,365	30,867	31,370	31,872	32,374	32,876	33,377	33,879	34,381	34,883	35,384	35,886
19	28,590	29,093	29,596	30,098	30,601	31,103	31,606	32,108	32,610	33,112	33,614	34,116	34,618	35,120	35,622
20	28,321	28,825	29,328	29,830	30,333	30,836	31,339	31,841	32,344	32,846	33,348	33,851	34,353	34,855	35,357
21	28,051	28,555	29,058	29,561	30,064	30,568	31,071	31,573	32,076	32,579	33,081	33,584	34,086	34,589	35,091
22	27,779	28,283	28,787	29,291	29,794	30,298	30,801	31,304	31,808	32,311	32,813	33,316	33,819	34,322	34,824
23	27,507	28,011	28,515	29,019	29,523	30,027	30,531	31,034	31,538	32,041	32,544	33,048	33,551	34,054	34,556
24	27,232	27,737	28,242	28,746	29,251	29,755	30,259	30,763	31,267	31,771	32,274	32,778	33,281	33,784	34,287
25	26,956	27,462	27,967	28,472	28,977	29,482	29,986	30,490	30,995	31,499	32,003	32,507	33,010	33,514	34,017
26	26,679	27,185	27,691	28,196	28,702	29,207	29,712	30,217	30,721	31,226	31,730	32,234	32,739	33,243	33,746
27	26,400	26,907	27,413	27,919	28,425	28,931	29,436	29,942	30,447	30,952	31,456	31,961	32,466	32,970	33,474
28	26,119	26,627	27,134	27,640	28,147	28,653	29,159	29,665	30,171	30,676	31,181	31,687	32,191	32,696	33,201
29	25,837	26,345	26,853	27,360	27,867	28,374	28,881	29,387	29,893	30,399	30,905	31,411	31,916	32,421	32,926
30	25,553	26,062	26,570	27,078	27,586	28,094	28,601	29,108	29,615	30,121	30,628	31,134	31,639	32,145	32,651
31	25,267	25,777	26,286	26,795	27,303	27,812	28,320	28,827	29,335	29,842	30,349	30,855	31,362	31,868	32,374
32	24,979	25,490	26,000	26,510	27,019	27,528	28,037	28,545	29,053	29,561	30,068	30,575	31,082	31,589	32,096
33	24,690	25,201	25,712	26,223	26,733	27,243	27,752	28,261	28,770	29,278	29,786	30,294	30,802	31,309	31,816
34	24,398	24,910	25,422	25,934	26,445	26,955	27,466	27,975	28,485	28,994	29,503	30,011	30,519	31,027	31,535
35	24,104	24,617	25,131	25,643	26,155	26,666	27,178	27,688	28,198	28,708	29,218	29,727	30,236	30,744	31,253
36	23,808	24,322	24,837	25,350	25,863	26,376	26,888	27,339	27,910	28,421	28,931	29,441	29,951	30,460	30,969
37	23,509	24,024	24,540	25,055	25,569	26,083	26,596	27,108	27,620	28,132	28,643	29,154	29,664	30,174	30,684
38	23,208	23,725	24,242	24,758	25,273	25,788	26,302	26,816	27,328	27,841	28,353	28,865	29,376	29,886	30,397
39	22,904	23,423	23,941	24,459	24,975	25,491	26,006	26,521	27,035	27,548	28,061	28,574	29,086	29,597	30,108
40	22,598	23,118	23,638	24,157	24,675	25,192	25,708	26,224	26,739	27,253	27,767	28,281	28,794	29,306	29,818
41	22,288	22,811	23,332	23,852	24,372	24,890	25,408	25,925	26,441	26,957	27,472	27,986	28,500	29,014	29,526
42	21,976	22,500	23,023	23,545	24,066	24,586	25,105	25,624	26,141	26,658	27,174	27,690	28,205	28,719	29,233
43	21,660	22,186	22,711	23,235	23,758	24,279	24,800	25,320	25,839	26,357	26,874	27,391	27,907	28,422	28,937
44	21,341	21,869	22,396	22,922	23,447	23,970	24,492	25,014	25,534	26,054	26,572	27,090	27,607	28,124	28,640
45	21,018	21,549	22,078	22,606	23,133	23,658	24,182	24,705	25,227	25,748	26,268	26,787	27,306	27,823	28,341
46	20,691	21,225	21,757	22,287	22,815	23,343	23,869	24,393	24,917	25,440	25,961	26,482	27,002	27,521	28,039
47	20,360	20,897	21,431	21,964	22,495	23,024	23,552	24,079	24,604	25,129	25,652	26,174	26,695	27,216	27,735
48	20,025	20,564	21,102	21,637	22,171	22,703	23,233	23,761	24,289	24,815	25,340	25,864	26,387	26,909	27,430
49	19,684	20,228	20,768	21,307	21,843	22,377	22,910	23,441	23,970	24,498	25,025	25,551	26,075	26,599	27,121
50	19,339	19,886	20,430	20,972	21,511	22,048	22,583	23,117	23,648	24,179	24,707	25,235	25,761	26,286	26,811
51	18,987	19,539	20,087	20,632	21,175	21,715	22,253	22,789	23,323	23,856	24,387	24,916	25,444	25,971	26,497
52	18,630	19,186	19,739	20,288	20,834	21,377	21,919	22,457	22,994	23,529	24,063	24,594	25,125	25,654	26,181
53	18,266	18,827	19,384	19,938	20,488	21,035	21,580	22,122	22,662	23,199	23,735	24,269	24,802	25,333	25,862
54	17,894	18,461	19,024	19,582	20,137	20,688	21,236	21,782	22,325	22,865	23,404	23,941	24,475	25,009	25,540
55	17,513	18,088	18,656	19,220	19,780	20,336	20,888	21,437	21,983	22,527	23,069	23,608	24,146	24,681	25,215
56	17,124	17,706	18,281	18,851	19,416	19,977	20,534	21,087	21,637	22,185	22,730	23,272	23,812	24,350	24,887
57	16,723	17,314	17,898	18,475	19,046	19,612	20,174	20,732	21,286	21,837	22,386	22,931	23,475	24,016	24,555
58	16,311	16,912	17,505	18,089	18,668	19,240	19,808	20,371	20,930	21,485	22,037	22,586	23,133	23,677	24,219
59	15,884	16,498	17,101	17,695	18,281	18,860	19,434	20,003	20,567	21,127	21,683	22,237	22,787	23,334	23,879
60	15,440	16,089	16,684	17,289	17,884	18,472	19,053	19,628	20,198	20,763	21,324	21,882	22,436	22,987	23,535

CENTRE DISTANCE TABLE

$z_2 - z_1$ \ $z_c - z_1$	82	83	84	85	86	87	88	89	90	91	92	93	94	95	96
1	40,750	41,250	41,750	42,250	42,750	43,250	43,750	44,250	44,750	45,250	45,750	46,250	46,750	47,250	47,750
2	40,499	40,999	41,499	41,999	42,499	42,999	43,499	43,999	44,499	44,999	45,499	45,999	46,499	46,999	47,499
3	40,248	40,748	41,248	41,748	42,248	42,748	43,248	43,748	44,248	44,748	45,248	45,748	46,248	46,748	47,248
4	39,995	40,495	40,996	41,496	41,996	42,496	42,996	43,496	43,996	44,496	44,996	45,496	45,996	46,496	46,996
5	39,742	40,243	40,743	41,243	41,743	42,243	42,743	43,243	43,743	44,243	44,743	45,243	45,744	46,244	46,744
6	39,489	39,989	40,489	40,989	41,489	41,990	42,490	42,990	43,490	43,990	44,490	44,990	45,490	45,991	46,491
7	39,235	39,735	40,235	40,735	41,235	41,736	42,236	42,736	43,236	43,736	44,236	44,737	45,237	45,737	46,237
8	38,980	39,480	39,980	40,480	40,981	41,481	41,981	42,481	42,982	43,482	43,982	44,482	44,982	45,483	45,983
9	38,724	39,224	39,725	40,225	40,725	41,226	41,726	42,226	42,726	43,227	43,727	44,227	44,728	45,228	45,728
10	38,468	38,968	39,468	39,969	40,469	40,970	41,470	41,970	42,471	42,971	43,471	43,972	44,472	44,972	45,473
11	38,210	28,711	39,211	39,712	40,212	40,713	41,213	41,714	42,214	42,715	43,215	43,715	44,216	44,716	45,217
12	37,952	38,453	38,954	39,454	39,955	40,455	40,956	41,456	41,957	42,458	42,958	43,458	43,959	44,459	44,960
13	37,694	38,194	38,695	39,196	39,697	40,197	40,698	41,199	41,699	42,200	42,700	43,201	43,701	44,202	44,703
14	37,434	37,935	38,436	38,937	39,438	39,938	40,439	40,940	41,441	41,941	42,442	42,943	43,443	43,944	44,445
15	37,174	37,675	38,176	38,677	39,178	39,679	40,180	40,680	41,181	41,682	42,183	42,684	43,184	43,685	44,186
16	36,913	37,414	37,915	38,416	38,917	39,418	39,919	40,420	40,921	41,422	41,923	42,424	42,925	43,426	43,927
17	36,650	37,152	37,653	38,154	38,656	39,157	39,658	40,159	40,660	41,161	41,663	42,164	42,665	43,166	43,667
18	36,388	36,889	37,391	37,892	38,394	38,895	39,396	39,898	40,399	40,900	41,401	41,902	42,404	42,905	43,406
19	36,124	36,626	37,127	37,629	38,130	38,632	39,134	39,635	40,136	40,638	41,139	41,641	42,142	41,643	43,144
20	35,859	36,361	36,863	37,365	37,867	38,368	38,870	39,372	39,873	40,375	40,876	41,378	41,879	42,381	42,882
21	35,593	36,096	36,598	37,100	37,602	38,104	38,606	39,108	39,609	40,111	40,613	41,115	41,616	42,118	42,619
22	35,327	35,829	36,336	36,834	37,336	37,838	38,340	38,843	39,345	39,846	40,348	40,850	41,352	41,854	42,356
23	35,059	35,562	36,065	36,567	37,070	37,572	38,074	38,577	39,079	39,581	40,083	40,585	41,087	41,589	42,091
24	34,791	35,294	35,796	36,299	36,802	37,305	37,807	38,310	38,812	39,315	39,817	40,319	40,822	41,324	41,826
25	34,521	35,024	35,527	36,031	36,534	37,037	37,539	38,042	38,545	39,048	39,550	40,053	40,555	41,057	41,560
26	34,250	34,754	35,257	35,761	36,264	36,767	37,270	37,774	38,277	38,779	39,282	39,785	40,288	40,790	41,293
27	33,978	34,482	34,986	35,490	35,994	36,497	37,001	37,504	38,007	38,510	39,014	39,517	40,020	40,522	41,025
28	33,705	34,210	34,714	35,218	35,722	36,226	36,730	37,233	37,737	38,240	38,744	39,247	39,750	40,254	40,757
29	33,431	33,936	34,441	34,945	35,450	35,954	36,458	36,962	37,466	37,970	38,473	38,977	39,480	39,984	40,487
30	33,156	33,661	64,166	34,671	35,176	35,681	36,185	36,689	37,194	37,698	38,202	38,706	39,209	39,713	40,217
31	32,880	33,385	33,891	34,396	34,901	35,406	35,911	36,416	36,920	37,425	37,929	38,433	38,937	39,441	39,945
32	32,602	33,108	33,614	34,120	34,625	35,131	35,636	36,141	36,646	37,151	37,656	38,160	38,665	39,169	39,673
33	32,323	32,829	33,336	33,842	34,348	34,854	35,360	35,865	36,371	36,876	37,381	37,886	38,391	38,895	39,400
34	32,042	32,550	33,057	33,563	34,070	34,576	35,082	35,588	36,094	36,600	37,105	37,611	38,116	38,621	39,126
35	31,761	32,268	32,776	33,283	33,790	34,297	34,804	35,310	35,816	36,332	36,828	37,334	37,840	38,345	38,850
36	31,478	31,986	32,494	33,002	33,509	34,017	34,524	35,031	35,538	36,044	36,550	37,057	37,563	38,068	38,574
37	31,193	31,702	32,211	32,719	33,227	33,735	34,243	34,750	35,258	35,765	36,271	36,778	37,284	37,791	38,297
38	30,907	31,417	31,926	32,435	32,944	33,452	33,961	34,468	34,976	35,484	35,991	36,498	37,005	37,512	38,018
39	30,619	31,130	31,640	32,149	32,659	33,168	33,677	34,185	34,694	35,202	35,710	36,217	36,725	37,232	37,739
40	30,330	30,841	31,352	31,862	32,372	32,882	33,392	33,901	34,410	34,919	35,427	35,935	36,443	36,951	37,458
41	30,039	30,551	31,062	31,574	32,085	32,595	33,105	33,615	34,125	34,634	35,143	35,652	36,160	36,668	37,176
42	29,746	30,259	30,772	31,284	31,795	32,306	32,817	33,328	33,838	34,348	34,858	35,367	35,876	36,385	36,893
43	29,245	29,965	30,479	30,992	31,504	32,016	32,528	33,039	33,550	34,061	34,571	35,081	35,590	36,100	36,609
44	29,155	29,670	30,184	30,698	31,212	31,724	32,237	32,749	33,260	33,772	34,283	34,793	35,304	35,814	36,323
45	28,857	29,373	29,888	30,403	30,917	31,431	31,944	32,457	32,969	33,481	33,993	34,504	35,015	35,526	36,036
46	28,557	29,074	29,590	30,106	30,621	31,136	31,650	32,164	32,677	33,190	33,702	34,214	34,726	35,237	35,748
47	28,254	28,772	29,290	29,807	30,323	30,839	31,354	31,868	32,383	32,896	33,410	33,922	34,435	34,947	35,458
48	27,950	28,469	28,988	29,506	30,023	30,540	31,056	31,572	32,087	32,601	33,115	33,629	34,142	34,655	35,167
49	27,643	28,164	28,684	29,203	29,721	30,239	30,756	31,273	31,789	32,304	32,819	33,334	33,848	34,362	34,875
50	27,334	27,856	28,377	28,898	29,417	29,936	30,455	30,972	31,489	32,006	32,522	33,037	33,552	34,067	34,581
51	27,022	27,546	28,068	28,590	29,111	29,632	30,151	30,670	31,188	31,706	32,223	32,739	33,255	33,770	34,285
52	26,708	27,233	27,757	28,281	28,803	29,325	29,845	30,365	30,885	31,403	31,921	32,439	32,956	33,492	33,988
53	26,391	26,918	27,444	27,969	28,492	29,015	29,538	30,059	30,579	31,099	31,618	32,137	32,655	33,172	33,689
54	26,071	26,600	27,127	27,654	28,179	28,704	29,228	29,750	30,272	30,793	31,313	31,833	32,352	32,870	33,388
55	25,748	26,279	26,808	27,337	27,864	28,390	28,915	29,439	29,962	30,485	31,006	31,527	32,047	32,567	33,086
56	25,421	25,955	26,486	27,017	27,546	28,073	28,600	29,126	29,651	30,174	30,697	31,219	31,741	32,261	32,781
57	25,092	25,627	26,161	26,694	27,224	27,754	28,283	28,810	29,336	29,862	30,386	30,909	31,432	31,954	32,485
58	24,759	25,297	25,833	26,367	26,900	27,432	27,962	28,492	29,020	29,546	30,072	30,597	31,121	31,644	32,167
59	24,422	24,963	25,501	26,038	26,573	27,107	27,639	28,170	28,700	29,229	29,756	30,283	30,808	31,333	31,856
60	24,081	24,624	25,166	25,705	26,243	26,779	27,313	27,846	28,378	28,908	29,438	23,966	30,493	31,019	31,544

CENTRE DISTANCE TABLE

$z_2 - z_1$ \ $z_c - z_1$	97	98	99	100	101	102	103	104	105	106	107	108	109	110	111
1	48,250	48,750	49,250	49,750	50,250	50,750	51,250	51,750	52,250	52,750	53,250	53,750	54,250	54,750	55,250
2	47,999	48,499	48,999	49,499	49,999	50,499	50,999	51,499	51,999	52,499	52,999	53,500	54,000	54,500	55,000
3	47,748	48,248	48,748	49,248	49,748	50,248	50,748	51,248	51,748	52,248	52,748	53,248	53,748	54,248	54,748
4	47,496	47,996	48,496	48,996	49,496	49,996	50,496	50,996	51,497	51,997	52,497	52,997	53,497	53,997	54,497
5	47,244	47,744	48,244	48,744	49,244	49,744	50,244	50,744	51,244	51,744	52,244	52,744	53,245	53,745	54,245
6	46,991	47,491	47,991	48,491	48,991	49,491	49,991	50,491	50,992	51,492	51,992	52,492	52,992	53,492	53,992
7	46,737	47,237	47,737	48,238	48,738	49,238	49,738	50,238	50,738	51,238	51,738	52,239	52,739	53,239	53,739
8	46,483	46,983	47,483	47,984	48,484	48,984	49,484	49,984	50,484	50,985	51,485	51,985	52,485	52,985	53,485
9	46,228	46,728	47,229	47,729	48,229	48,729	49,230	49,730	50,230	50,730	51,230	51,731	52,231	52,731	53,231
10	45,973	46,473	46,973	47,474	47,974	48,474	48,975	49,475	49,975	50,475	50,976	51,476	51,976	52,476	52,977
11	45,717	46,217	46,718	47,218	47,718	48,219	48,719	49,219	49,720	50,220	50,720	51,221	51,721	52,221	52,721
12	45,460	45,961	46,461	46,962	47,462	47,962	48,463	48,963	49,464	49,964	50,464	50,965	51,465	51,965	52,466
13	45,203	45,704	46,204	46,705	47,205	47,706	48,206	48,707	49,207	49,707	50,208	50,708	51,209	51,709	52,209
14	44,945	45,446	45,946	46,447	46,948	47,448	47,949	48,449	48,950	49,450	49,951	50,451	50,952	51,452	51,953
15	44,687	45,187	45,688	46,189	46,689	47,190	47,691	48,191	48,692	49,192	49,693	50,194	50,694	51,195	51,695
16	44,427	44,928	45,429	45,930	46,431	46,931	47,432	47,933	48,434	48,934	49,435	49,935	50,436	50,937	51,437
17	44,168	44,669	45,169	45,670	46,171	46,672	47,173	47,674	48,174	48,675	49,176	49,677	50,178	50,678	51,179
18	43,907	44,408	44,909	45,410	45,911	46,412	46,913	47,414	47,915	48,416	48,917	49,417	49,918	50,419	50,920
19	43,646	44,147	44,648	45,149	45,650	46,151	46,652	47,153	47,654	48,155	48,656	49,157	49,658	50,159	50,660
20	43,384	43,885	44,386	44,888	45,389	45,890	46,391	46,892	47,394	47,895	48,396	48,897	49,398	49,899	50,400
21	43,121	43,622	44,124	44,625	45,127	45,628	46,129	46,631	47,132	47,633	48,134	48,636	49,137	49,638	50,139
22	42,857	43,359	43,861	44,362	44,864	45,365	45,867	46,368	46,870	47,371	47,872	48,374	48,875	49,376	49,877
23	42,593	43,095	43,597	44,098	44,600	45,102	45,603	46,105	46,607	47,108	47,610	48,111	48,613	49,114	49,615
24	42,328	42,830	43,332	43,834	44,336	44,838	45,339	45,841	46,343	46,845	47,346	47,848	48,349	48,851	49,353
25	42,062	42,564	43,067	43,569	44,071	44,573	45,075	45,577	46,079	46,580	47,082	47,584	48,086	48,587	49,089
26	41,795	42,298	42,800	43,303	43,805	44,307	44,809	45,311	45,813	46,315	46,817	47,319	47,821	48,323	48,825
27	41,528	42,031	42,533	43,036	43,538	44,041	44,543	45,045	45,548	46,050	46,552	47,054	47,556	48,058	48,560
28	41,260	41,762	42,265	42,768	43,271	43,773	44,276	44,779	45,281	45,783	46,286	46,788	47,290	47,793	48,295
29	40,990	41,493	41,997	42,500	43,003	43,505	44,008	44,511	45,014	45,516	46,019	46,521	47,024	47,526	48,029
30	40,720	41,224	41,727	42,230	42,733	43,237	43,740	44,243	44,745	45,248	45,751	46,254	46,756	47,259	47,762
31	40,449	40,953	41,457	41,960	42,464	42,967	43,470	43,973	44,477	44,980	45,483	45,986	46,488	46,991	47,494
32	40,177	40,681	41,185	41,689	42,193	42,696	43,200	43,703	44,207	44,710	45,213	45,716	46,220	46,723	47,226
33	39,904	40,409	40,913	41,417	41,921	42,425	42,929	43,433	43,936	44,440	44,943	45,447	45,950	46,453	46,956
34	39,630	40,135	40,640	41,144	41,648	42,153	42,657	43,161	43,665	44,169	44,672	45,176	45,680	46,183	46,687
35	39,356	39,861	40,365	40,870	41,375	41,879	42,384	42,888	43,392	43,897	44,401	44,905	45,408	45,912	46,416
36	39,080	39,585	40,090	40,595	41,100	41,605	42,110	42,615	43,119	43,624	44,128	44,632	45,136	45,640	46,144
37	38,803	39,309	39,814	40,320	40,825	41,330	41,835	42,340	42,845	43,350	43,854	44,359	44,863	45,368	45,872
38	38,525	39,031	39,537	40,043	40,549	41,054	41,560	42,065	42,570	43,075	43,580	44,085	44,590	45,094	45,599
39	38,246	38,752	39,259	39,765	40,271	40,777	41,283	41,789	42,294	42,800	43,305	43,810	44,315	44,820	45,325
40	37,965	38,473	38,979	39,486	39,993	40,499	41,005	41,511	42,017	42,523	43,029	43,534	44,040	45,545	45,050
41	37,684	38,192	38,699	39,206	39,713	40,220	40,727	41,233	41,739	42,245	42,751	43,257	43,763	44,269	44,774
42	37,402	37,910	38,417	38,925	39,433	39,940	40,447	40,954	41,460	41,967	42,473	42,980	43,486	43,992	44,497
43	37,118	37,626	38,135	38,643	39,151	39,659	40,166	40,673	41,180	41,687	42,194	42,701	43,207	43,714	44,220
44	36,833	37,342	37,851	38,359	38,868	39,376	39,884	40,392	40,899	41,407	41,914	42,421	42,928	43,435	43,941
45	36,546	37,056	37,566	38,075	38,584	39,093	39,601	40,109	40,617	41,125	41,633	42,140	42,648	43,155	43,662
46	36,259	36,769	37,279	37,789	38,299	38,808	39,317	39,826	40,334	40,843	41,351	41,859	42,366	42,874	43,381
47	35,970	36,481	36,992	37,502	38,012	38,522	39,031	39,541	40,050	40,559	41,067	41,576	42,084	42,592	43,100
48	35,679	36,191	36,702	37,214	37,724	38,235	38,754	39,255	39,764	40,274	40,783	41,292	41,800	42,309	42,817
49	35,388	35,900	36,412	36,924	37,435	37,946	38,457	38,967	39,478	39,988	40,497	41,007	41,516	42,025	42,533
50	35,094	35,607	36,120	36,633	37,145	37,656	38,168	38,679	39,190	39,700	40,210	40,720	41,230	41,740	42,249
51	34,799	35,313	35,827	36,340	36,853	37,365	37,877	38,389	38,900	39,412	39,922	40,433	40,943	41,453	41,963
52	34,503	35,018	35,532	36,046	36,560	37,073	37,586	38,098	38,610	39,122	39,633	40,144	40,655	41,166	41,676
53	34,205	34,721	35,236	35,751	36,265	36,779	37,292	37,805	38,318	38,831	39,343	39,854	40,366	40,877	41,388
54	33,905	34,422	34,938	35,454	35,969	36,483	36,998	37,512	38,025	38,538	39,051	39,563	40,075	40,587	41,099
55	33,604	34,121	34,638	35,155	35,671	36,186	36,702	37,216	37,730	38,244	38,758	39,271	39,783	40,296	40,808
56	33,300	33,819	34,337	34,855	35,372	35,888	36,404	36,919	37,434	37,949	38,463	38,977	39,490	40,003	40,516
57	32,995	33,515	34,034	34,553	35,070	35,588	36,105	36,621	37,137	37,652	38,167	38,682	39,196	39,710	40,223
58	32,688	33,209	33,729	34,249	34,768	35,286	35,804	36,321	36,838	37,354	37,870	38,385	38,900	39,414	39,929
59	32,379	32,901	33,422	33,943	34,463	34,982	35,501	36,019	36,537	37,054	37,571	38,087	38,603	39,118	39,633
60	32,068	32,591	33,114	33,636	34,157	34,677	35,197	35,716	36,235	36,753	37,270	37,787	38,304	38,820	39,336

CENTRE DISTANCE TABLE

$z_2 - z_1$	$z_c - z_1$														
	112	113	114	115	116	117	118	119	120	121	122	123	124	125	126
1	55,750	56,250	56,750	57,250	57,750	58,250	58,750	59,250	59,750	60,250	60,750	61,250	61,750	62,250	62,750
2	55,500	56,000	56,500	57,000	57,500	58,000	58,500	59,000	59,500	60,000	60,500	61,000	61,500	62,000	62,500
3	55,248	55,748	56,248	56,748	57,248	57,748	58,249	58,749	59,249	59,749	60,249	60,749	61,249	61,749	62,249
4	54,997	55,497	55,997	56,497	56,997	57,497	57,997	58,497	58,997	59,497	59,997	60,497	60,997	61,497	61,997
5	54,745	55,245	55,745	56,245	56,745	57,245	57,745	58,245	58,745	59,245	59,745	60,245	60,745	61,245	61,745
6	54,492	54,992	55,492	55,992	56,492	56,992	57,493	57,993	58,493	58,993	59,493	59,993	60,493	60,993	61,493
7	54,239	54,739	55,239	55,739	56,239	56,740	57,240	57,740	58,240	58,740	59,240	59,740	60,240	60,740	61,240
8	53,985	54,486	54,986	55,486	55,986	56,486	56,986	57,486	57,986	58,487	58,987	59,487	59,987	60,487	60,987
9	53,731	54,232	54,732	55,232	55,732	56,232	56,732	57,232	57,733	58,233	58,733	59,233	59,733	60,233	60,734
10	53,477	53,977	54,477	54,977	55,478	55,978	56,478	56,978	57,478	57,979	58,479	58,979	59,479	59,979	60,479
11	53,222	53,722	54,222	54,722	55,223	55,723	56,223	56,723	57,224	57,724	58,224	58,724	59,225	59,725	60,225
12	52,966	53,466	53,967	54,467	54,967	55,468	55,968	56,468	56,968	57,469	57,969	58,469	58,970	59,470	59,970
13	52,710	53,210	53,711	54,211	54,711	55,212	55,712	56,212	56,713	57,213	57,713	58,214	58,714	59,214	59,715
14	52,453	52,954	53,454	53,954	54,455	54,955	55,456	55,956	56,456	56,957	57,457	57,958	58,458	58,958	59,459
15	52,196	52,696	53,197	53,697	54,198	54,698	55,199	55,699	56,200	56,700	57,201	57,701	58,201	58,702	59,202
16	51,938	52,439	52,938	53,440	53,940	54,441	54,941	55,442	55,943	56,443	56,943	57,444	57,944	58,445	58,945
17	51,680	52,180	52,681	53,182	53,682	54,183	54,684	55,184	55,685	56,185	56,686	57,186	57,687	58,188	58,688
18	51,421	51,921	52,422	52,923	53,424	53,924	54,425	54,926	55,426	55,927	56,428	56,928	57,429	57,930	58,430
19	51,161	51,662	52,163	52,664	53,164	53,665	54,166	54,667	55,168	55,668	56,169	56,670	57,170	57,671	58,172
20	50,901	51,402	51,903	52,404	52,905	53,406	53,906	54,407	54,908	55,409	55,910	56,411	56,911	57,412	57,913
21	50,640	51,141	51,642	52,143	52,644	53,145	53,646	54,147	54,648	55,149	55,650	56,151	56,652	57,153	57,654
22	50,379	50,880	51,381	51,882	52,383	52,885	53,386	53,887	54,388	54,889	55,390	55,891	56,392	56,893	57,394
23	50,117	50,618	51,119	51,621	52,122	52,623	53,124	53,625	54,127	54,628	55,129	55,630	56,131	56,632	57,133
24	49,854	50,355	50,857	51,358	51,860	52,361	52,862	53,364	53,865	54,366	54,867	55,369	55,870	56,371	56,872
25	49,591	50,092	50,594	51,095	51,597	52,098	52,600	53,101	53,603	54,104	54,605	55,107	55,608	56,109	56,611
26	49,327	49,829	50,330	50,832	51,334	51,835	52,337	52,838	53,340	53,841	54,343	54,844	55,346	55,847	56,348
27	49,062	49,564	50,066	50,568	51,070	51,571	52,073	52,575	53,076	53,578	54,080	54,581	55,083	55,584	56,086
28	48,797	49,299	49,801	50,303	50,805	51,307	51,809	52,311	52,812	53,314	53,816	54,318	54,819	55,321	55,822
29	48,531	49,033	49,535	50,037	50,540	51,042	51,544	52,046	52,548	53,050	53,551	54,053	54,555	55,057	55,559
30	48,264	48,767	49,269	49,771	50,274	50,776	51,278	51,780	52,282	52,784	53,286	53,788	54,290	54,792	55,294
31	47,997	48,499	49,002	49,504	50,007	50,509	51,012	51,514	52,016	52,519	53,021	53,523	54,025	54,527	55,029
32	47,728	48,231	48,734	49,237	49,739	50,242	50,745	51,247	51,750	52,252	52,754	53,257	53,759	54,261	54,763
33	47,460	47,963	48,466	48,969	49,471	49,974	50,477	50,980	51,482	51,985	52,487	52,990	53,492	53,995	54,497
34	47,190	47,693	48,196	48,699	49,203	49,706	50,209	50,711	51,214	51,717	52,220	52,723	53,225	53,728	54,230
35	46,919	47,423	47,926	48,430	48,933	49,436	49,939	50,443	50,946	51,449	51,952	52,454	52,957	53,460	53,963
36	46,648	47,152	47,656	48,159	48,663	49,166	49,670	50,173	50,676	51,179	51,683	52,186	52,689	53,192	53,694
37	46,376	46,880	47,384	47,888	48,392	48,895	49,399	49,903	50,406	50,910	51,413	51,916	52,419	52,923	53,426
38	46,103	46,608	47,112	47,616	48,120	48,624	49,128	49,632	50,135	50,639	51,142	51,646	52,149	52,653	53,156
39	45,829	46,334	46,839	47,343	47,847	48,352	48,856	49,360	49,864	50,368	50,871	51,375	51,879	52,382	52,886
40	45,555	46,060	46,565	47,069	47,574	48,078	48,583	49,087	49,591	50,095	50,599	51,103	51,607	52,111	52,615
41	45,279	45,785	56,290	46,795	47,300	47,804	48,309	48,814	49,318	49,823	50,327	50,831	51,335	51,839	52,343
42	45,003	45,509	46,014	46,519	47,025	47,530	48,035	48,539	49,044	49,549	50,053	50,558	51,062	51,567	52,071
43	44,726	45,232	45,737	46,243	46,749	47,254	47,759	48,264	48,769	49,274	49,779	50,284	50,789	51,293	51,798
44	44,448	44,954	45,460	45,966	46,472	46,978	47,483	47,986	48,494	48,999	49,504	50,009	50,514	51,019	51,524
45	44,169	44,675	45,182	45,688	46,194	46,700	47,206	47,712	48,218	48,723	49,229	49,734	50,239	50,744	51,249
46	43,888	44,395	44,902	45,409	45,916	46,422	46,928	47,434	47,940	48,446	48,952	49,458	49,963	50,469	50,974
47	43,607	44,115	44,622	45,129	45,636	46,143	46,649	47,156	47,662	48,168	48,675	49,180	49,686	50,192	50,698
48	43,325	43,833	44,341	44,848	45,356	45,863	46,370	46,877	47,383	47,890	48,396	48,903	49,409	49,915	50,421
49	43,042	43,550	44,058	44,566	45,074	45,582	46,089	46,596	47,103	47,610	48,117	48,624	49,130	49,637	50,143
50	42,758	43,267	43,775	44,283	44,792	45,300	45,807	46,315	46,823	47,330	47,837	48,344	48,851	49,358	49,864
51	42,472	42,982	43,491	44,000	44,508	45,017	45,525	46,033	46,541	47,049	47,556	48,063	48,571	49,078	49,585
52	42,186	42,696	43,205	43,715	44,224	44,733	45,241	45,750	46,258	46,766	47,274	47,782	48,290	48,797	49,304
53	41,898	42,409	42,919	43,429	43,938	44,448	44,957	45,466	45,974	46,483	46,991	47,499	48,007	48,515	49,023
54	41,610	42,121	42,631	43,142	43,652	44,161	44,671	45,181	45,690	46,199	46,708	47,216	47,724	48,233	48,741
55	41,320	41,831	42,342	42,853	43,364	43,874	44,384	44,894	45,404	45,913	46,423	46,932	47,441	47,949	48,458
56	41,029	41,541	42,052	42,564	43,075	43,586	44,097	44,607	45,117	45,627	46,137	46,646	47,156	47,665	48,174
57	40,736	41,249	41,761	42,273	42,785	43,297	43,808	44,319	44,829	45,340	45,850	46,360	46,870	47,379	47,889
58	40,442	40,956	41,469	41,981	42,494	43,006	43,518	44,029	44,540	45,051	45,562	46,073	46,583	47,093	47,603
59	40,147	40,661	41,175	41,688	42,201	42,714	43,226	43,739	44,250	44,762	45,273	45,784	46,295	46,805	47,316
60	39,851	40,366	40,880	41,394	41,908	42,421	42,934	43,447	43,959	44,471	44,983	45,495	46,006	46,517	47,028

CENTRE DISTANCE TABLE

$z_2 - z_1$ \ $z_c - z_1$	127	128	129	130	131	132	133	134	135	136	137	138	139	140	141
1	63,250	63,750	64,250	64,750	65,250	65,750	66,250	66,750	67,250	67,750	68,250	68,750	69,250	69,750	70,250
2	63,000	64,500	64,000	64,500	65,000	65,500	66,000	66,500	67,000	67,500	68,000	68,500	69,000	69,500	70,000
3	62,749	63,249	63,749	64,249	64,749	65,249	65,749	66,249	66,749	67,249	67,749	68,249	68,749	69,249	69,749
4	62,497	62,997	63,497	63,997	64,497	64,997	65,497	65,997	66,497	66,997	67,497	67,997	68,497	68,998	69,498
5	62,245	62,745	62,245	63,745	64,246	64,746	65,246	65,746	66,246	66,746	67,246	67,746	68,246	68,746	69,246
6	61,993	62,493	62,993	63,493	63,993	64,493	64,993	65,493	65,994	66,494	66,994	67,494	67,994	68,494	68,994
7	61,740	62,240	62,741	63,241	63,741	64,241	64,741	65,241	65,741	66,241	66,741	67,241	67,741	68,241	68,741
8	61,487	61,987	62,487	62,988	63,488	63,988	64,488	64,988	65,488	65,988	66,488	66,988	67,488	67,989	68,489
9	61,234	61,734	62,234	62,734	63,234	63,734	64,235	64,735	65,235	65,735	66,235	66,735	67,235	67,735	68,235
10	60,980	61,480	61,980	62,480	62,980	63,480	63,981	64,481	64,981	65,481	65,981	66,481	66,982	67,482	67,982
11	60,725	61,225	61,726	62,226	62,726	63,226	63,726	64,227	64,727	65,227	65,727	66,227	66,727	67,228	67,728
12	60,470	60,971	61,471	61,971	62,471	62,972	63,472	63,972	64,472	64,972	65,473	65,973	66,473	66,973	67,473
13	60,215	60,715	61,215	61,716	62,216	62,716	63,217	63,717	64,217	64,717	65,218	65,718	66,218	66,718	67,219
14	59,959	60,459	60,960	61,460	61,960	62,461	62,961	63,461	63,962	64,462	64,962	65,463	65,963	66,463	66,963
15	59,703	60,203	60,703	61,204	61,704	62,205	62,705	63,205	63,706	64,206	64,706	65,207	65,707	66,207	66,708
16	59,446	59,946	60,447	60,947	61,448	61,948	62,449	62,949	63,449	63,950	64,450	64,951	65,451	65,951	66,452
17	59,189	59,689	60,190	60,690	61,191	61,691	62,192	62,692	63,193	63,693	64,193	64,694	65,194	65,695	66,195
18	58,931	59,431	59,932	60,433	60,933	61,434	61,934	62,435	62,935	63,436	63,936	64,437	64,937	65,438	65,938
19	58,672	59,173	59,674	60,174	60,675	61,176	61,676	62,177	62,677	63,178	63,679	64,179	64,680	65,180	65,681
20	58,414	58,914	59,415	59,916	60,417	60,917	61,418	61,919	62,419	62,920	63,421	63,921	64,422	64,922	65,423
21	58,154	58,655	59,156	59,657	60,158	60,658	61,159	61,660	62,161	62,661	63,162	63,663	64,163	64,664	65,165
22	57,895	58,395	58,896	59,397	59,898	60,399	60,900	61,401	61,901	62,402	62,903	63,404	63,905	64,405	64,906
23	57,634	58,135	58,636	59,137	59,638	60,139	60,640	61,141	61,642	62,143	62,643	63,144	63,645	64,146	64,647
24	57,373	57,874	58,375	58,877	59,378	59,879	60,380	60,881	61,382	61,883	62,383	62,884	63,385	63,886	64,387
25	57,112	57,613	58,114	58,615	59,117	59,618	60,119	60,620	61,121	61,622	62,123	62,624	63,125	63,626	64,127
26	56,850	57,351	57,852	58,354	58,855	59,356	59,857	60,359	60,860	61,361	61,862	62,363	62,864	63,365	63,866
27	56,587	57,089	57,590	58,091	58,593	59,094	59,595	60,097	60,598	61,099	61,600	62,102	62,603	63,104	63,605
28	56,324	56,826	57,327	57,829	58,330	58,832	59,333	59,834	60,336	60,837	61,338	61,840	62,341	62,842	63,344
29	56,060	56,562	57,064	57,565	58,067	58,568	59,070	59,572	60,073	60,574	61,076	61,577	62,079	62,580	63,081
30	55,796	56,298	56,800	57,301	57,803	58,305	58,807	59,308	59,810	60,311	60,813	61,314	61,816	62,317	62,819
31	55,531	56,033	56,535	57,037	57,539	58,041	58,542	59,044	59,546	60,048	60,549	61,051	61,553	62,054	62,556
32	55,266	55,768	56,270	56,772	57,274	57,776	58,278	58,780	59,282	59,783	60,285	60,787	61,289	61,790	62,292
33	54,999	55,502	56,004	56,506	57,008	57,510	58,013	58,515	59,017	59,519	60,020	60,522	61,024	61,526	62,028
34	54,733	55,235	55,738	56,240	56,742	57,245	57,747	58,249	58,751	59,253	59,755	60,257	60,759	61,261	61,763
35	54,465	54,968	55,471	55,973	56,476	56,978	57,480	57,983	58,485	58,987	59,489	59,992	60,494	60,996	61,498
36	54,197	54,700	55,203	55,706	56,208	56,711	57,213	57,716	58,218	58,721	59,223	59,725	60,228	60,730	61,232
37	53,929	54,432	54,935	55,437	55,940	56,443	56,946	57,448	57,951	58,454	58,956	59,459	59,961	60,464	60,966
38	53,659	54,162	54,666	55,169	55,672	56,175	56,677	57,180	57,683	58,186	58,689	59,191	59,694	60,196	60,699
39	53,389	53,893	54,396	54,899	55,402	55,906	56,409	56,912	57,415	57,918	58,420	58,923	59,426	59,929	60,431
40	53,119	53,622	54,126	54,629	55,133	55,636	56,139	56,642	57,145	57,649	58,152	58,655	59,158	59,660	60,163
41	52,847	53,351	53,855	54,358	54,862	55,365	55,869	56,372	56,876	57,379	57,882	58,385	58,889	59,392	59,895
42	52,575	53,079	53,583	54,087	54,591	55,094	55,598	56,102	56,605	57,109	57,612	58,116	58,619	59,122	59,625
43	52,302	52,806	53,311	53,815	54,319	54,823	55,327	55,830	56,334	56,838	57,342	57,845	58,349	58,852	59,355
44	52,028	52,533	53,037	53,542	54,046	54,550	55,054	55,559	56,063	56,566	57,070	57,574	58,078	58,581	59,085
45	51,754	52,259	52,764	53,268	53,773	54,277	54,782	55,286	55,790	56,294	56,798	57,302	57,806	58,310	58,814
46	51,479	51,984	52,489	52,994	53,499	54,003	54,508	55,013	55,517	56,021	56,526	57,030	57,534	58,038	58,542
47	51,203	51,708	52,214	52,719	53,224	53,729	54,234	54,739	55,243	55,748	56,252	56,757	57,261	57,765	58,270
48	50,926	51,432	51,938	52,443	52,948	53,454	53,959	54,464	54,969	55,474	55,978	56,483	56,988	57,492	57,997
49	50,649	51,155	51,661	52,166	52,672	53,178	53,683	54,188	54,694	55,199	55,704	56,209	56,713	57,218	57,723
50	50,371	50,877	51,383	51,889	52,395	52,901	53,406	53,912	54,418	54,923	55,428	55,933	56,439	56,944	57,448
51	50,091	50,598	51,104	51,611	52,117	52,623	53,129	53,635	54,141	54,647	55,152	55,658	56,163	56,668	57,173
52	49,811	50,318	50,825	51,332	51,838	52,345	52,851	53,357	53,863	54,369	54,875	55,381	55,887	56,392	56,897
53	49,530	50,038	50,545	51,052	51,559	52,066	52,572	53,079	53,585	54,091	54,598	55,104	55,609	56,115	56,621
54	49,249	49,756	50,264	50,771	51,279	51,786	52,293	52,799	53,306	53,813	54,319	54,825	55,332	55,838	56,344
55	48,966	49,474	49,982	50,490	50,997	51,505	52,012	52,519	53,026	53,533	54,040	54,547	55,053	55,559	56,066
56	48,682	49,191	49,699	50,207	50,715	51,223	51,731	52,238	52,746	53,253	53,760	54,267	54,774	55,280	55,787
57	48,398	48,907	49,415	49,924	50,432	50,941	51,449	51,956	52,464	52,972	53,479	53,986	54,494	55,001	55,507
58	48,112	48,622	49,131	49,640	50,148	50,657	51,165	51,674	52,182	52,690	53,198	53,705	54,213	54,720	55,227
59	47,826	48,335	48,845	49,354	49,864	50,373	50,881	51,390	51,899	52,407	52,915	53,423	53,931	54,439	54,946
60	47,538	48,048	48,558	49,068	49,578	50,087	50,597	51,106	51,615	52,123	52,632	53,140	53,648	54,156	54,664

CENTRE DISTANCE TABLE

$z_2 - z_1$	$z_c - z_1$														
	142	143	144	145	146	147	148	149	150	151	152	153	154	155	156
1	70,750	71,250	71,750	72,250	72,750	73,250	73,750	74,250	74,750	75,250	75,750	76,250	76,750	77,250	77,750
2	70,500	71,000	71,500	72,000	72,500	73,000	73,500	74,000	74,500	75,000	75,500	76,000	76,500	77,000	77,500
3	70,249	70,749	71,249	71,749	72,249	72,749	73,249	73,749	74,249	74,749	75,249	75,749	76,249	76,749	77,249
4	69,998	70,498	70,998	71,498	71,998	72,498	72,998	73,498	73,998	74,498	74,998	75,498	75,998	76,498	76,998
5	69,746	70,246	70,746	71,246	71,746	72,246	72,746	73,246	73,746	74,246	74,746	75,246	75,746	76,246	76,746
6	69,494	69,994	70,494	70,994	71,494	71,994	72,494	72,994	73,494	73,994	74,494	74,994	75,494	75,994	76,494
7	69,241	69,742	70,242	70,742	71,242	71,742	72,242	72,742	73,242	73,742	74,242	74,742	75,242	75,742	76,242
8	68,989	69,489	69,989	70,489	70,989	71,489	71,989	72,489	72,989	73,489	73,990	74,490	74,990	75,490	75,990
9	68,736	69,236	69,736	70,236	70,736	71,236	71,736	72,236	72,736	73,236	73,737	74,237	74,737	75,237	75,737
10	68,482	68,982	69,482	69,982	70,482	70,983	71,483	71,983	72,483	72,983	73,483	73,983	74,483	74,984	75,484
11	68,228	68,728	69,228	69,728	70,229	70,729	71,229	71,729	72,229	72,729	73,230	73,730	74,230	74,730	75,230
12	67,974	68,474	68,974	69,474	69,974	70,475	70,975	71,475	71,975	72,475	72,975	73,476	73,976	74,476	74,976
13	67,719	68,219	68,719	69,220	69,720	70,220	70,720	71,220	71,721	72,221	72,721	73,221	73,721	74,222	74,722
14	67,464	67,964	68,464	68,964	69,465	69,965	70,465	70,965	71,466	71,966	72,466	72,966	73,467	73,967	74,467
15	67,208	67,708	68,209	68,709	69,209	69,710	70,210	70,710	71,210	71,711	72,211	72,711	73,212	73,712	74,212
16	66,952	67,452	67,953	68,453	68,953	69,454	69,954	70,454	70,955	71,455	71,955	72,456	72,956	73,456	73,957
17	66,696	67,196	67,696	68,197	68,697	69,198	69,698	70,198	70,699	71,199	71,699	72,200	72,700	73,200	73,701
18	66,439	66,939	67,440	67,940	68,440	68,941	69,441	69,942	70,442	70,943	71,443	71,943	72,444	72,944	73,445
19	66,181	66,682	67,182	67,683	68,183	68,684	69,184	69,685	70,185	70,686	71,186	71,687	72,187	72,688	73,188
20	65,924	66,424	66,925	67,425	67,926	68,426	68,927	69,427	69,928	70,428	70,929	71,430	71,930	72,430	72,931
21	65,665	66,166	66,667	67,167	67,668	68,169	68,669	69,170	69,670	70,171	70,671	71,172	71,672	72,173	72,674
22	65,407	65,907	66,408	66,909	67,410	67,910	68,411	68,911	69,412	69,913	70,413	70,914	71,415	71,915	72,416
23	65,148	65,648	66,149	66,650	67,151	67,651	68,152	68,653	69,154	69,654	70,155	70,656	71,156	71,657	72,158
24	64,888	65,389	65,890	66,391	66,891	67,392	67,893	68,394	68,895	69,395	69,896	70,397	70,898	71,398	71,899
25	64,628	65,129	65,630	66,131	66,632	67,133	67,633	68,134	68,635	69,136	69,637	70,138	70,638	71,139	71,640
26	64,367	64,868	65,369	65,870	66,371	66,872	67,373	67,874	68,375	68,876	69,377	69,878	70,379	70,880	71,380
27	64,106	64,607	65,109	65,610	66,111	66,612	67,113	67,614	68,115	68,616	69,117	69,618	70,119	70,620	71,121
28	63,845	64,346	64,847	65,348	65,850	66,351	66,852	67,353	67,854	68,355	68,856	69,357	69,858	70,359	70,860
29	63,583	64,084	64,585	65,087	65,588	66,089	66,590	67,092	67,593	68,094	68,595	69,096	69,597	70,098	70,599
30	63,320	63,822	64,323	64,825	65,326	65,827	66,329	66,830	67,331	67,832	68,334	68,835	69,336	69,837	70,338
31	63,057	63,559	64,060	64,562	65,063	65,565	66,066	66,568	67,069	67,570	68,072	68,573	69,074	69,575	70,077
32	62,794	63,295	63,797	64,299	64,800	65,302	65,803	66,305	66,806	67,308	67,809	68,311	68,812	69,313	69,815
33	62,530	63,032	63,533	64,035	64,537	65,038	65,540	66,041	66,543	67,045	67,546	68,048	68,549	69,051	69,552
34	62,265	62,767	63,269	63,771	64,273	64,774	65,276	65,778	66,279	66,781	67,283	67,784	68,286	68,787	69,289
35	62,000	62,502	63,004	63,506	64,008	64,510	65,012	65,514	66,015	66,517	67,019	67,521	68,022	68,524	69,026
36	61,734	62,237	62,739	63,241	63,743	64,245	64,747	65,249	65,751	66,253	66,754	67,256	67,758	68,260	68,762
37	61,468	61,970	62,473	62,975	63,477	63,979	64,481	64,983	65,486	65,988	66,489	66,991	67,493	67,995	68,497
38	61,201	61,704	62,206	62,709	63,211	63,713	64,215	64,718	65,220	65,722	66,224	66,726	67,228	67,730	68,232
39	60,934	61,437	61,939	62,442	62,944	63,447	63,949	64,451	64,954	65,456	65,958	66,460	66,963	67,465	67,967
40	60,666	61,169	61,672	62,174	62,677	63,179	63,682	64,185	64,687	65,189	65,692	66,194	66,696	67,199	67,701
41	60,398	60,900	61,403	61,906	62,409	62,912	63,414	63,917	64,420	64,922	65,425	65,927	66,430	66,932	67,434
42	60,129	60,632	61,135	61,638	62,141	62,643	63,146	63,649	64,152	64,655	65,157	65,660	66,162	66,665	67,168
43	59,859	60,362	60,865	61,368	61,872	62,375	62,878	63,381	63,884	64,386	64,889	65,392	65,895	66,397	66,900
44	59,588	60,092	60,595	61,099	61,602	62,105	62,608	63,112	63,615	64,118	64,621	65,124	65,626	66,129	66,632
45	59,318	59,821	60,325	60,828	61,332	61,835	62,339	62,842	63,345	63,848	64,352	64,855	65,358	65,861	66,364
46	59,046	59,550	60,054	60,557	61,061	61,565	62,068	62,572	63,075	63,578	64,082	64,585	65,088	65,591	66,095
47	58,774	59,278	59,782	60,286	60,790	61,293	61,797	62,301	62,804	63,308	63,811	64,315	64,818	65,322	65,825
48	58,501	59,005	59,509	60,014	60,518	61,022	61,526	62,029	62,533	63,037	63,541	64,044	64,548	65,051	65,555
49	58,227	58,732	59,236	59,741	60,245	60,749	61,253	61,757	62,261	62,765	63,269	63,773	64,277	64,780	65,284
50	57,953	58,458	58,963	59,467	59,972	60,476	60,980	61,485	61,989	62,493	62,997	63,501	64,005	64,509	65,013
51	57,678	58,183	58,688	59,193	59,698	60,202	60,707	61,211	61,716	62,220	62,725	63,229	63,733	64,237	64,741
52	57,103	57,908	58,413	58,918	59,423	59,928	60,433	60,938	61,442	61,947	62,451	62,956	63,460	63,964	64,469
53	57,127	57,632	58,137	58,643	59,148	59,653	60,158	60,663	61,168	61,673	62,177	62,682	63,187	63,691	64,195
54	56,850	57,355	57,861	58,367	58,872	59,377	59,883	60,388	60,893	61,398	61,903	62,408	62,913	63,417	63,922
55	56,572	57,078	57,584	58,090	58,595	59,101	59,607	60,112	60,617	61,123	61,628	62,133	62,638	63,143	63,648
56	56,293	56,800	57,306	57,812	58,318	58,824	59,330	59,835	60,341	60,847	61,352	61,857	62,362	62,868	63,373
57	56,014	56,521	57,027	57,534	58,040	58,546	59,052	59,558	60,064	60,570	61,075	61,581	62,087	62,592	63,097
58	55,734	56,241	56,748	57,255	57,761	58,268	58,774	59,280	59,786	60,292	60,798	61,304	61,810	62,315	62,821
59	55,543	55,961	56,468	56,975	57,482	57,988	58,495	59,002	59,508	60,014	60,521	61,027	61,533	62,038	62,544
60	55,172	55,680	56,187	56,694	57,202	57,709	58,215	58,722	59,229	59,736	60,242	60,748	61,255	61,761	62,267

CENTRE DISTANCE TABLE

$z_2 - z_1$ \ $z_c - z_1$	157	158	159	160	161	162	163	164	165	166	167	168	169	170	171
1	78,250	78,750	79,250	79,750	80,250	80,750	81,250	81,750	82,250	82,750	83,250	83,750	84,250	84,750	85,250
2	78,000	78,500	79,000	79,500	80,000	80,500	81,000	81,500	82,000	82,500	83,000	83,500	84,000	84,500	85,000
3	77,749	78,249	78,749	79,249	79,749	80,249	80,749	81,249	81,749	82,249	82,749	83,249	83,749	84,249	84,749
4	77,498	77,998	78,498	78,998	79,498	79,998	80,498	80,998	81,498	81,998	82,498	82,998	83,498	83,998	84,498
5	77,246	77,746	78,246	78,746	79,246	79,747	80,247	80,747	81,247	81,747	82,247	82,747	83,247	83,747	84,247
6	76,995	77,495	77,995	78,495	78,995	79,495	79,995	80,495	80,995	81,495	81,995	82,495	82,995	83,495	83,995
7	76,742	77,242	77,742	78,243	78,743	79,243	79,743	80,243	80,743	81,243	81,743	82,243	82,743	83,243	83,743
8	76,490	76,990	77,490	77,990	78,490	78,990	79,490	79,990	80,490	80,990	81,491	81,991	82,491	82,991	83,491
9	76,237	76,737	77,237	77,737	78,237	78,737	79,238	79,738	80,238	80,738	81,238	81,738	82,238	82,738	83,238
10	75,984	76,484	76,984	77,484	77,984	78,484	78,984	79,485	79,985	80,485	80,985	81,485	81,985	82,485	82,985
11	75,730	76,230	76,730	77,231	77,731	78,231	78,731	79,231	79,731	80,231	80,731	81,232	81,732	82,232	82,732
12	75,476	75,976	76,477	76,977	77,477	77,977	78,477	78,977	79,478	79,978	80,478	80,978	81,478	81,978	82,478
13	75,222	75,722	76,222	76,723	77,223	77,723	78,223	78,723	79,223	79,724	80,224	80,724	81,224	81,724	82,224
14	74,967	75,468	75,968	76,468	76,968	77,468	77,969	78,469	78,969	79,469	79,969	80,470	80,970	81,470	81,970
15	74,712	75,213	75,713	76,213	76,713	77,214	77,714	78,214	78,714	79,214	79,715	80,215	80,715	81,215	81,716
16	74,457	74,957	75,457	75,958	76,458	76,958	77,459	77,959	78,459	78,959	79,460	79,960	80,460	80,960	81,461
17	74,201	74,701	75,202	75,702	76,202	76,703	77,203	77,703	78,204	78,704	79,204	79,705	80,205	80,705	81,205
18	73,945	74,445	74,946	75,446	75,946	76,447	76,947	77,447	77,948	78,448	78,948	79,449	79,949	80,449	80,950
19	73,688	74,189	74,689	75,190	75,690	76,190	76,691	77,191	77,692	78,192	78,692	79,193	79,693	80,193	80,694
20	73,431	73,932	74,432	74,933	75,433	75,934	76,434	76,935	77,435	77,935	78,436	78,936	79,437	79,937	80,437
21	73,174	73,675	74,175	74,676	75,176	75,677	76,177	76,678	77,178	77,679	78,179	78,679	79,180	79,680	80,181
22	72,916	73,417	73,918	74,418	74,919	75,419	75,920	76,420	76,921	77,421	77,922	78,422	78,923	79,423	79,924
23	72,658	73,159	73,659	74,160	74,661	75,161	75,662	76,162	76,663	77,164	77,664	78,165	78,665	79,166	79,666
24	72,400	72,900	73,401	73,902	74,402	74,903	75,404	75,904	76,405	76,906	77,406	77,907	78,407	78,908	79,409
25	72,141	72,641	73,142	73,643	74,144	74,644	75,145	75,646	76,146	76,647	77,148	77,648	78,149	78,650	79,150
26	71,881	72,382	72,883	73,384	73,885	74,385	74,886	75,387	75,888	76,388	76,889	77,390	77,891	78,391	78,892
27	71,621	72,122	72,623	73,124	73,625	74,126	74,627	75,128	75,628	76,129	76,630	77,131	77,632	78,132	78,633
28	71,361	71,862	72,363	72,864	73,365	73,866	74,367	74,868	75,369	75,870	76,370	76,871	77,372	77,873	78,374
29	71,101	71,602	72,103	72,604	73,105	73,606	74,107	74,608	75,109	75,609	76,110	76,611	77,112	77,613	78,114
30	70,839	71,341	71,842	72,343	72,844	73,345	73,846	74,347	74,848	75,349	75,850	76,351	76,852	77,353	77,854
31	70,578	71,079	71,580	72,082	72,583	73,084	73,585	74,086	74,587	75,088	75,589	76,090	76,592	77,093	77,594
32	70,316	70,817	71,319	71,820	72,321	72,822	73,324	73,825	74,326	74,827	75,328	75,829	76,330	76,832	77,333
33	70,053	70,555	71,056	71,558	72,059	72,560	73,062	73,563	74,064	74,565	75,067	75,568	76,069	76,570	77,071
34	69,791	70,292	70,794	71,295	71,796	72,298	72,799	73,301	73,802	74,303	74,805	75,306	75,807	76,308	76,810
35	69,527	70,029	70,530	71,032	71,533	72,035	72,536	73,038	73,539	74,041	74,542	75,044	75,545	76,046	76,548
36	69,263	69,765	70,267	70,768	71,270	71,772	72,273	72,775	73,276	73,778	74,279	74,781	75,282	75,784	76,285
37	68,999	69,501	70,003	70,504	71,006	71,508	72,010	72,511	73,013	73,514	74,016	74,518	75,019	75,521	76,022
38	68,734	69,236	69,738	70,240	70,742	71,244	71,745	72,247	72,749	73,251	73,752	74,254	74,756	75,257	75,759
39	68,469	68,971	69,473	69,975	70,477	70,979	71,481	71,983	72,485	72,986	73,488	73,990	74,492	74,993	75,495
40	68,203	68,705	69,207	69,710	70,212	70,714	71,216	71,718	72,220	72,722	73,224	73,725	74,227	74,729	75,231
41	67,937	68,439	68,941	69,444	69,946	70,448	70,950	71,452	71,954	72,456	72,958	73,460	73,962	74,464	74,966
42	67,670	68,172	68,675	69,177	69,680	70,182	70,684	71,186	71,689	72,191	72,693	73,195	73,697	74,199	74,701
43	67,403	67,905	68,408	68,910	69,413	69,915	70,418	70,920	71,422	71,925	72,427	72,929	73,431	73,933	74,436
44	67,135	67,638	68,140	68,643	69,146	69,648	70,151	70,653	71,156	71,658	72,160	72,663	73,165	73,667	74,170
45	66,867	67,369	67,872	68,375	68,878	69,380	69,883	70,386	70,888	71,391	71,893	72,396	72,898	73,401	73,903
46	66,598	67,101	67,604	68,107	68,609	69,112	69,615	70,118	70,621	71,123	71,626	72,129	72,631	73,134	73,636
47	66,328	66,831	67,335	67,838	68,341	68,844	69,347	69,850	70,352	70,855	71,358	71,861	72,363	72,866	73,369
48	66,058	66,562	67,065	67,568	68,071	68,574	69,078	69,581	70,084	70,587	71,090	71,592	72,095	72,598	73,101
49	65,788	66,291	66,795	67,298	67,801	68,305	68,808	69,311	69,814	70,318	70,821	71,324	71,827	72,330	72,833
50	65,517	66,020	66,524	67,028	67,531	68,035	68,538	69,041	69,545	70,048	70,551	71,054	71,558	72,061	72,564
51	65,245	65,749	66,253	66,756	67,260	67,764	68,267	68,771	69,274	69,778	70,281	70,785	71,288	71,791	72,294
52	64,973	65,477	65,981	66,485	66,989	67,492	67,996	68,500	69,004	69,507	70,011	70,514	71,018	71,521	72,024
53	64,700	65,204	65,708	66,212	66,716	67,221	67,724	68,228	68,732	69,236	69,740	70,243	70,747	71,251	71,754
54	64,426	64,931	65,435	65,940	66,444	66,948	67,452	67,956	68,460	68,964	69,468	69,972	70,476	70,980	71,483
55	64,152	64,657	65,162	65,666	66,171	66,675	67,179	67,684	68,188	68,692	69,196	69,700	70,204	70,708	71,212
56	63,878	64,383	64,887	65,392	65,897	66,401	66,906	67,410	67,915	68,419	68,923	69,428	69,932	70,436	70,940
57	63,602	64,107	64,613	65,118	65,622	66,127	66,632	67,137	67,641	68,146	68,650	69,155	69,659	70,163	70,667
58	63,326	63,832	64,337	64,842	65,347	65,852	66,357	66,862	67,367	67,872	68,376	68,881	69,385	69,890	70,394
59	63,050	63,556	64,061	64,566	65,072	65,577	66,082	66,587	67,092	67,597	68,102	68,607	69,112	69,616	70,121
60	62,773	63,279	63,784	64,290	64,796	65,301	65,806	66,312	66,817	67,322	67,827	68,332	68,837	69,342	69,847

CENTRE DISTANCE TABLE

$z_2 - z_1$ \ $z_c - z_1$	172	173	174	175	176	177	178	179	180	181	182	183	184	185	186
1	85,750	86,250	86,750	87,250	87,750	88,250	88,750	89,250	89,750	90,250	90,750	91,250	91,750	92,250	92,750
2	85,500	86,000	86,500	87,000	87,500	88,000	88,500	89,000	89,500	90,000	90,500	91,000	91,500	92,000	92,500
3	85,249	85,749	86,249	86,749	87,249	87,749	88,249	88,749	89,249	89,749	90,249	90,749	91,249	91,749	92,249
4	84,998	85,498	85,998	86,498	86,998	87,498	87,998	88,498	88,998	89,498	89,998	90,498	90,998	91,498	91,998
5	84,747	85,247	85,747	86,247	86,747	87,247	87,747	88,247	88,747	89,247	89,747	90,247	90,747	91,247	91,747
6	84,495	84,995	85,495	85,995	86,495	86,995	87,495	87,995	88,495	88,995	89,495	89,995	90,495	90,995	91,495
7	84,243	84,743	85,243	85,743	86,243	86,743	87,243	87,743	88,243	88,743	89,243	89,744	90,244	90,744	91,244
8	83,991	84,491	84,991	85,491	85,991	86,491	86,991	87,491	87,991	88,491	88,991	89,491	89,991	90,492	90,992
9	83,738	84,238	84,738	85,238	85,738	86,239	86,739	87,239	87,739	88,239	88,739	89,239	89,739	90,239	90,739
10	83,485	83,985	84,485	84,986	85,486	85,986	86,486	86,986	87,486	87,986	88,486	88,986	89,486	89,986	90,486
11	83,232	83,732	84,232	84,732	85,232	85,733	86,233	86,733	87,233	87,733	88,233	88,733	89,233	89,733	90,233
12	82,978	83,479	83,979	84,479	84,979	85,479	85,979	86,479	86,979	87,480	87,980	88,480	88,980	89,480	89,980
13	82,725	83,225	83,725	84,225	84,725	85,225	85,725	86,226	86,726	87,226	87,726	88,226	88,726	89,226	89,727
14	82,470	82,971	83,471	83,971	84,471	84,971	85,471	85,972	86,472	86,972	87,472	87,972	88,472	88,973	89,473
15	82,216	82,716	83,216	83,716	84,217	84,717	85,217	85,717	86,217	86,718	87,218	87,718	88,218	88,718	89,219
16	81,961	82,461	82,961	83,462	83,962	84,462	84,962	85,463	85,963	86,463	86,963	87,463	87,964	88,464	88,964
17	81,706	82,206	82,706	83,206	83,707	84,207	84,707	85,208	85,708	86,208	86,708	87,208	87,709	88,209	88,709
18	81,450	81,950	82,451	82,951	83,451	83,952	84,452	84,952	85,452	85,953	86,453	86,953	87,454	87,954	88,454
19	81,194	81,694	82,195	82,695	83,195	83,696	84,196	84,696	85,197	85,697	86,197	86,698	87,198	87,698	88,199
20	80,938	81,438	81,939	82,439	82,939	83,440	83,940	84,440	84,941	85,441	85,941	86,442	86,942	87,442	87,943
21	80,681	81,182	81,682	82,182	82,683	83,183	83,684	84,184	84,684	85,185	85,685	86,186	86,686	87,186	87,687
22	80,424	80,925	81,425	81,926	82,426	82,927	83,427	83,927	84,428	84,928	85,429	85,929	86,430	86,930	87,430
23	80,167	80,667	81,168	81,668	82,169	82,669	83,170	83,670	84,171	84,671	85,172	85,672	86,173	86,673	87,174
24	79,909	80,410	80,910	81,411	81,911	82,412	82,912	83,413	83,913	84,414	84,915	85,415	85,915	86,416	86,917
25	79,651	80,152	80,652	81,153	81,653	82,154	82,655	83,155	83,656	84,156	84,657	85,157	85,658	86,159	86,659
26	79,393	79,893	80,394	80,895	81,395	81,896	82,397	82,897	83,398	83,898	84,399	84,900	85,400	85,901	86,401
27	79,134	79,634	80,135	80,636	81,137	81,637	82,138	82,639	83,139	83,640	84,141	84,641	85,142	85,643	86,143
28	78,875	79,375	79,876	80,377	80,878	81,378	81,879	82,380	82,881	83,381	83,882	84,383	84,883	85,384	85,885
29	78,615	79,116	79,617	80,117	80,618	81,119	81,620	82,121	82,621	83,122	83,623	84,124	84,625	85,125	85,626
30	78,355	78,856	79,357	79,858	80,359	80,859	81,360	81,861	82,362	82,863	83,364	83,865	84,365	84,866	85,367
31	78,095	78,596	79,097	79,598	80,098	80,599	81,100	81,601	82,102	82,603	83,104	83,605	84,106	84,607	85,107
32	77,834	78,335	78,836	79,337	79,838	80,339	80,840	81,341	81,842	82,343	82,844	83,345	83,846	84,347	84,848
33	77,573	78,074	78,575	79,076	79,577	80,078	80,579	81,080	81,581	82,082	82,583	83,084	83,585	84,086	84,587
34	77,311	77,812	78,313	78,815	79,316	79,817	80,318	80,819	81,320	81,821	82,323	82,824	83,325	83,826	84,327
35	77,049	77,550	78,052	78,553	79,054	79,555	80,057	80,558	81,059	81,560	82,061	82,562	83,064	83,565	84,066
36	76,787	77,288	77,789	78,291	78,792	79,293	79,795	80,296	80,797	81,299	81,800	82,301	82,802	83,303	83,805
37	76,524	77,025	77,527	78,028	78,530	79,031	79,532	80,034	80,535	81,036	81,538	82,039	82,540	83,042	83,543
38	76,261	76,762	77,264	77,765	78,267	78,768	79,270	79,771	80,273	80,774	81,275	81,777	82,278	82,779	83,281
39	75,997	76,499	77,000	77,502	78,003	78,505	79,007	79,508	80,010	80,511	81,013	81,514	82,015	82,517	83,018
40	75,733	76,235	76,736	77,238	77,740	78,241	78,743	79,245	79,746	80,248	80,749	81,251	81,752	82,254	82,755
41	75,468	75,970	76,472	76,974	77,475	77,977	78,479	78,981	79,482	79,984	80,486	80,987	81,489	81,991	82,492
42	75,203	75,705	76,207	76,709	77,211	77,713	78,215	78,716	79,218	79,720	80,222	80,724	81,225	81,727	82,229
43	74,938	75,440	75,942	76,444	76,946	77,448	77,950	78,452	78,954	79,456	79,957	80,459	80,961	81,463	81,965
44	74,672	75,174	75,676	76,178	76,680	77,183	77,685	78,187	78,689	79,191	79,693	80,195	80,696	81,198	81,700
45	74,405	74,908	75,410	75,912	76,415	76,917	77,419	77,921	78,423	78,925	79,427	79,929	80,431	80,933	81,435
46	74,139	74,641	75,144	75,646	76,148	76,651	77,153	77,655	78,157	78,660	79,162	79,664	80,166	80,668	81,170
47	73,871	74,374	74,876	75,379	75,881	76,384	76,886	77,389	77,891	78,393	78,896	79,398	79,900	80,402	80,904
48	73,604	74,106	74,609	75,112	75,614	76,117	76,619	77,122	77,624	78,127	78,629	79,131	79,634	80,136	80,638
49	73,335	73,838	74,341	74,844	75,346	75,849	76,352	76,854	77,357	77,860	78,362	78,865	79,367	79,869	80,372
50	73,067	73,570	74,073	74,575	75,078	75,581	76,084	76,587	77,089	77,592	78,095	78,597	79,100	79,602	80,105
51	72,797	73,301	73,804	74,307	74,810	75,313	75,816	76,318	76,821	77,324	77,827	78,329	78,832	79,335	79,837
52	72,528	73,031	73,534	74,037	74,541	75,044	75,547	76,050	76,553	77,056	77,558	78,061	78,564	79,067	79,570
53	72,258	72,761	73,264	73,768	74,271	74,774	75,277	75,780	76,284	76,787	77,290	77,793	78,296	78,799	79,301
54	71,987	72,490	72,994	73,497	74,001	74,504	75,008	75,511	76,014	76,517	77,020	77,524	78,027	78,530	79,033
55	71,716	72,219	72,723	73,227	73,730	74,234	74,737	75,241	75,744	76,247	76,751	77,254	77,757	78,260	78,764
56	71,444	71,948	72,452	72,955	73,459	73,963	74,466	74,970	75,474	75,977	76,481	76,984	77,487	77,991	78,494
57	71,171	71,676	72,180	72,684	73,187	73,691	74,195	74,699	75,203	75,706	76,210	76,713	77,217	77,720	78,224
58	70,899	71,403	71,907	72,411	72,915	73,419	73,923	74,427	74,931	75,435	75,939	76,442	76,946	77,450	77,953
59	70,625	71,130	71,634	72,138	72,643	73,147	73,651	74,155	74,659	75,163	75,667	76,171	76,675	77,179	77,682
60	70,351	70,856	71,361	71,865	72,370	72,874	73,378	73,882	74,387	74,891	75,395	75,899	76,403	76,907	77,411

$z_2 - z_1$ \ $z_c - z_1$	187	188	189	190	191	192	193	194	195	196	197	198	199	200	201
1	93,250	93,750	94,250	94,750	95,250	95,750	96,250	96,750	97,250	97,750	98,250	98,750	99,250	99,750	100,250
2	93,000	93,500	94,000	94,500	95,000	95,500	96,000	96,500	97,000	97,500	98,000	98,500	99,000	99,500	100,000
3	92,749	93,249	93,749	94,249	94,749	95,249	95,749	96,249	96,749	97,249	97,749	98,249	98,749	99,249	99,749
4	92,498	92,998	93,498	93,998	94,498	94,998	95,498	95,998	96,498	96,998	97,498	97,998	98,498	98,998	99,498
5	92,247	92,747	93,247	93,747	94,247	94,747	95,247	95,747	96,247	96,747	97,247	97,747	98,247	98,747	99,247
6	91,995	92,496	92,996	93,496	93,996	94,496	94,996	95,496	95,996	96,496	96,996	97,496	97,996	98,496	98,996
7	91,744	92,244	92,744	93,244	93,744	94,244	94,744	95,244	95,744	96,244	96,744	97,244	97,744	98,244	98,744
8	91,492	91,992	92,492	92,992	93,492	93,992	94,492	94,992	95,492	95,992	96,492	96,992	97,492	97,992	98,492
9	91,239	91,739	92,239	92,739	93,239	93,740	94,240	94,740	95,240	95,740	96,240	96,740	97,240	97,740	98,240
10	90,987	91,487	91,987	92,487	92,987	93,487	93,987	94,487	94,987	95,487	95,987	96,487	96,987	97,487	97,988
11	90,734	91,234	91,734	92,234	92,734	93,234	93,734	94,234	94,734	95,234	95,734	96,235	96,735	97,235	97,735
12	90,480	90,980	91,480	91,981	92,481	92,981	93,481	93,981	94,481	94,981	95,481	95,981	96,482	96,982	97,482
13	90,227	90,727	91,227	91,727	92,227	92,727	93,227	93,728	94,228	94,728	95,228	95,728	96,228	96,728	97,228
14	89,973	90,473	90,973	91,473	91,973	92,474	92,974	93,474	93,974	94,474	94,974	95,474	95,975	96,475	96,975
15	89,719	90,219	90,719	91,219	91,719	92,220	92,720	93,220	93,720	94,220	94,720	95,221	95,721	96,221	96,721
16	89,464	89,964	90,465	90,965	91,465	91,965	92,465	92,966	93,466	93,966	94,466	94,966	95,466	95,967	96,467
17	89,209	89,710	90,210	90,710	91,210	91,711	92,211	92,711	93,211	93,711	94,212	94,712	95,212	95,712	96,212
18	88,954	89,455	89,955	90,455	90,955	91,456	91,956	92,456	92,956	93,457	93,957	94,457	94,957	95,457	95,958
19	88,699	89,199	89,699	90,200	90,700	91,200	91,701	92,201	92,701	93,201	93,702	94,202	94,702	95,202	95,703
20	88,443	88,943	89,444	89,944	90,444	90,945	91,445	91,945	92,446	92,946	93,446	93,947	94,447	94,947	95,447
21	88,187	88,687	89,188	89,688	90,189	90,689	91,189	91,690	92,190	92,690	93,191	93,691	94,191	94,691	95,192
22	87,931	88,431	88,932	89,432	89,932	90,433	90,933	91,433	91,934	92,434	92,934	93,435	93,935	94,436	94,936
23	87,674	88,174	88,675	89,175	89,676	90,176	90,677	91,177	91,677	92,178	92,678	93,179	93,679	94,179	94,680
24	87,417	87,917	88,418	88,918	89,419	89,919	90,420	90,920	91,421	91,921	92,421	92,922	93,422	93,923	94,423
25	87,160	87,660	88,161	88,661	89,162	89,662	90,163	90,663	91,164	91,664	92,165	92,665	93,165	93,666	94,166
26	86,902	87,402	87,903	88,404	88,904	89,405	89,905	90,406	90,906	91,407	91,907	92,408	92,908	93,409	93,909
27	86,644	87,144	87,645	88,146	88,646	89,147	89,647	90,148	90,649	91,149	91,650	92,150	92,651	93,151	93,652
28	86,385	86,886	87,387	87,887	88,388	88,889	89,389	89,890	90,391	90,891	91,392	91,892	92,393	92,894	93,394
29	86,127	86,627	87,128	87,629	88,130	88,630	89,131	89,632	90,132	90,633	91,134	91,634	92,135	92,635	93,136
30	85,869	86,368	86,869	87,370	87,871	88,371	88,872	89,373	89,874	90,374	90,875	91,376	91,876	92,377	92,878
31	85,608	86,109	86,610	87,111	87,611	88,112	88,613	89,141	89,615	90,115	90,616	91,117	91,618	92,118	92,619
32	85,348	85,849	86,350	86,851	87,352	87,853	88,354	88,854	89,355	89,856	90,357	90,858	91,358	91,859	92,360
33	85,088	85,589	86,090	86,591	87,092	87,593	88,094	88,595	89,096	89,596	90,097	90,598	91,099	91,600	92,101
34	84,828	85,329	85,830	86,331	86,832	87,333	87,834	88,335	88,836	89,336	89,837	90,338	90,839	91,340	91,841
35	84,567	85,068	85,569	86,070	86,571	87,072	87,573	88,074	88,575	89,076	89,577	90,078	90,579	91,080	91,581
36	84,306	84,807	85,308	85,809	86,310	86,811	87,312	87,813	88,315	88,816	89,317	89,818	90,319	90,820	91,321
37	84,044	84,545	85,047	85,548	86,049	86,550	87,051	87,552	88,053	88,555	89,056	89,557	90,058	90,559	91,060
38	83,782	84,283	84,785	85,286	85,787	86,288	86,790	87,291	87,792	88,293	88,794	89,296	89,797	90,298	90,799
39	83,520	84,021	84,522	85,024	85,525	86,026	86,528	87,029	87,530	88,032	88,533	89,034	89,535	90,036	90,538
40	83,257	83,758	84,260	84,761	85,263	85,764	86,265	86,767	87,268	87,769	88,271	88,772	89,273	89,775	90,276
41	82,994	83,495	83,997	84,498	85,000	85,501	86,003	86,504	87,006	87,507	88,008	88,510	89,011	89,513	90,014
42	82,730	83,232	83,733	84,235	84,737	85,238	85,740	86,241	86,743	87,244	87,746	88,247	88,749	89,250	89,751
43	82,466	82,968	83,470	83,971	84,473	84,975	85,476	85,978	86,479	86,981	87,483	87,984	88,486	88,987	89,489
44	82,202	82,704	83,206	83,707	84,209	84,711	85,213	85,714	86,216	86,718	87,219	87,721	88,222	88,724	89,226
45	81,937	82,439	82,941	83,443	83,945	84,447	84,948	85,450	85,952	86,454	86,955	87,457	87,959	88,460	88,962
46	81,672	82,174	82,676	83,178	83,680	84,182	84,684	85,186	85,688	86,189	86,691	87,193	87,695	88,196	88,698
47	81,407	81,909	82,411	82,913	83,415	83,917	84,419	84,921	85,423	85,925	86,427	86,928	87,430	87,932	88,434
48	81,141	81,643	82,145	82,647	83,149	83,651	84,153	84,656	85,158	85,660	86,162	86,663	87,165	87,667	88,169
49	80,874	81,376	81,879	82,381	82,883	83,386	83,888	84,390	84,892	85,394	85,896	86,398	86,900	87,402	87,904
50	80,607	81,110	81,612	82,115	82,617	83,119	83,622	84,124	84,626	85,128	85,630	86,133	86,635	87,137	87,639
51	80,340	80,843	81,345	81,848	82,350	82,853	83,355	83,857	84,360	84,862	85,364	85,867	86,369	86,871	87,373
52	80,072	80,575	81,078	81,580	82,083	82,585	83,088	83,590	84,093	84,595	85,098	85,600	86,102	86,605	87,107
53	79,804	80,307	80,810	81,313	81,815	82,318	82,820	83,323	83,826	84,328	84,831	85,333	85,836	86,338	86,840
54	79,536	80,039	80,542	81,044	81,547	82,050	82,553	83,055	83,558	84,061	84,563	85,066	85,568	86,071	86,574
55	79,267	79,770	80,273	80,776	81,279	81,782	82,284	82,787	83,290	83,793	84,296	84,798	85,301	85,804	86,306
56	78,997	79,500	80,003	80,507	81,010	81,513	82,016	82,519	83,022	83,524	84,027	84,530	85,033	85,536	86,038
57	78,727	79,231	79,734	80,237	80,740	81,243	81,747	82,250	82,753	83,256	83,759	84,262	84,765	85,267	85,770
58	78,457	78,960	79,464	79,967	80,470	80,974	81,477	81,980	82,483	82,987	83,490	83,993	84,496	84,999	85,502
59	78,186	78,690	79,193	79,697	80,200	80,704	81,207	81,710	82,214	82,717	83,220	83,723	84,226	84,730	85,233
60	77,915	78,418	78,922	79,426	79,929	80,433	80,936	81,440	81,943	82,447	82,950	83,454	83,957	84,460	84,963

CENTRE DISTANCE TABLE

$z_c - z_1$

$z_2 - z_1$	67	68	69	70	71	72	73	74	75	76	77	78	79	80	81
61	14,976	15,623	16,253	16,870	17,477	18,074	18,663	19,245	19,821	20,392	20,959	21,521	22,079	22,634	23,187
62	14,486	15,156	15,805	16,438	17,057	17,664	18,263	18,854	19,437	20,015	20,587	21,154	21,717	22,277	22,833
63	13,964	14,665	15,337	15,988	16,622	17,243	17,852	18,452	19,044	19,629	20,208	20,781	21,349	21,914	22,474
64	13,396	14,140	14,843	15,517	16,170	16,806	17,428	18,040	18,641	19,234	19,820	20,400	20,975	21,544	22,110
65		13,569	14,315	15,021	15,698	16,352	16,990	17,614	18,227	18,830	19,424	20,011	20,593	21,168	21,739
66			13,742	14,491	15,199	15,878	16,534	17,174	17,800	18,414	19,018	19,614	20,202	20,785	21,361
67				13,915	14,667	15,377	16,058	16,717	17,358	17,985	18,600	19,206	19,803	20,393	20,977
68					14,088	14,842	15,554	16,238	16,898	17,541	18,170	18,787	19,394	19,992	20,583
69						14,260	15,017	15,732	16,417	17,080	17,724	18,355	18,973	19,581	20,181
70							14,433	15,193	15,910	16,597	17,261	17,907	18,539	19,159	19,769
71								14,606	15,368	16,087	16,776	17,442	18,090	18,723	19,345
72									14,778	15,542	16,264	16,955	17,623	18,272	18,907
73										14,950	15,717	16,441	17,134	17,803	18,455
74											15,123	15,892	16,617	17,312	17,984
75												15,294	16,066	16,794	17,490
76													15,466	16,240	16,970
77														15,638	16,414
78															15,809
79															

$z_c - z_1$

$z_2 - z_1$	82	83	84	85	86	87	88	89	90	91	92	93	94	95	96
61	23,736	24,282	24,827	25,369	25,909	26,448	26,984	27,519	28,053	28,585	29,116	29,646	30,175	30,702	31,229
62	23,386	23,936	24,484	25,029	25,572	26,113	26,652	27,189	27,725	28,259	28,792	29,324	29,854	30,384	30,912
63	23,031	23,585	24,136	24,685	25,231	25,774	26,316	26,856	27,394	27,931	28,466	28,999	29,531	30,062	30,592
64	22,671	23,229	23,784	24,336	24,885	25,432	25,977	26,519	27,060	27,598	28,136	28,671	29,205	29,738	30,270
65	22,305	22,868	23,427	23,982	24,535	25,085	25,633	26,178	26,722	27,263	27,803	28,340	28,877	29,412	29,945
66	21,933	22,501	23,064	23,624	24,181	24,734	25,285	25,834	26,380	26,924	27,466	28,006	28,545	29,082	29,617
67	21,554	22,127	22,696	23,260	23,821	24,379	24,933	25,485	26,034	26,581	27,126	27,669	28,210	28,749	29,287
68	21,168	21,747	22,321	22,891	23,456	24,018	24,577	25,132	25,685	26,235	26,782	27,328	27,872	28,413	28,953
69	20,774	21,360	21,940	22,515	23,085	23,652	24,215	24,774	25,330	25,884	26,435	26,983	27,530	28,074	28,616
70	20,370	20,964	21,551	22,132	22,708	23,280	23,847	24,411	24,971	25,528	26,083	26,634	27,184	27,731	28,276
71	19,956	20,558	21,153	21,742	22,324	22,901	23,474	24,042	24,607	25,168	25,726	26,281	26,834	27,384	27,932
72	19,530	20,143	20,747	21,343	21,932	22,516	23,094	23,668	24,237	24,803	25,365	25,924	26,480	27,033	27,584
73	19,091	19,716	20,330	20,935	21,532	22,123	22,708	23,287	23,862	24,432	24,998	25,561	26,121	26,678	27,232
74	18,637	19,275	19,901	20,516	21,123	21,721	22,313	22,899	23,479	24,055	24,626	25,194	25,758	26,318	26,876
75	18,164	18,818	19,458	20,085	20,702	21,310	21,910	22,503	23,090	23,672	24,248	24,821	25,389	25,954	26,515
76	17,669	18,344	19,000	19,642	20,270	20,888	21,498	22,099	22,693	23,281	23,863	24,441	25,014	25,584	26,149
77	17,146	17,847	18,524	19,182	19,825	20,455	21,075	21,685	22,287	22,883	23,472	24,055	24,634	25,208	25,778
78	16,588	17,323	18,025	18,704	19,363	20,008	20,640	21,261	21,872	22,476	23,072	23,662	24,247	24,827	25,402
79	15,981	16,762	17,499	18,203	18,884	19,545	20,191	20,824	21,446	22,059	22,664	23,261	23,852	24,438	25,019
80		16,152	16,936	17,675	18,381	19,063	19,727	20,374	21,008	21,632	22,246	22,852	23,450	24,043	24,629
81			16,324	17,110	17,850	18,559	19,243	19,908	20,556	21,192	21,817	22,432	23,039	23,639	24,232
82				16,495	17,283	18,026	18,737	19,422	20,088	20,739	21,376	22,002	22,618	23,227	23,828
83					16,666	17,457	18,202	18,914	19,601	20,269	20,921	21,559	22,187	22,805	23,414
84						16,837	17,631	18,378	19,091	19,780	20,450	21,103	21,743	22,372	22,991
85							17,009	17,804	18,553	19,269	19,959	20,630	21,285	21,926	22,556
86								17,180	17,977	18,728	19,446	20,138	20,810	21,467	22,109
87									17,351	18,150	18,903	19,623	20,317	20,991	21,648
88										17,522	18,323	19,078	19,799	20,495	21,171
89											17,692	18,496	19,253	19,976	20,673
90												17,862	18,669	19,427	20,152
91													18,033	18,841	19,602
92														18,203	19,014
93															18,374

$z_c - z_1$

$z_2 - z_1$	101	102	103	104	105	106	107	108	109	110	111
61	33,848	34,370	34,891	35,411	35,931	36,450	36,968	37,486	38,003	38,520	39,037
62	33,538	34,061	34,583	35,104	35,625	36,145	36,664	37,183	37,702	38,219	38,737
63	33,226	33,750	34,273	34,796	35,317	35,838	36,359	36,879	37,398	37,917	38,435
64	32,911	33,437	33,961	34,485	35,008	35,530	36,052	36,573	37,093	37,613	38,132
65	32,595	33,121	33,647	34,172	34,696	35,220	35,743	36,265	36,786	37,307	37,827
66	32,276	32,804	33,331	33,858	34,383	34,908	35,432	35,955	36,477	36,999	37,520
67	31,954	32,484	33,013	33,541	34,068	34,594	35,119	35,643	36,167	36,690	37,212
68	31,630	32,162	32,692	33,221	33,750	34,277	34,804	35,329	35,854	36,378	36,902
69	31,304	31,837	32,369	32,900	33,430	33,959	34,487	35,014	35,540	36,065	36,590
70	30,974	31,510	32,043	32,576	33,108	33,638	34,167	34,696	35,223	35,750	36,276
71	30,642	31,179	31,715	32,250	32,783	33,315	33,846	34,376	34,905	35,433	35,960
72	30,307	30,846	31,384	31,921	32,456	32,989	33,522	34,054	34,584	35,113	35,642
73	29,969	30,510	31,050	31,589	32,126	32,661	33,196	33,729	34,261	34,792	35,322
74	29,627	30,171	30,713	31,254	31,793	32,331	32,867	33,402	33,935	34,468	34,999
75	29,282	29,829	30,373	30,916	31,457	31,997	32,535	33,072	33,607	34,142	34,675
76	28,933	29,482	30,030	30,575	31,119	31,660	32,201	32,739	33,277	33,813	34,348
77	28,580	29,133	29,683	30,231	30,777	31,321	31,863	32,404	32,944	33,482	34,018
78	28,223	28,779	29,332	29,883	30,431	30,978	31,523	32,066	32,607	33,147	33,686
79	27,862	28,421	28,977	29,531	30,082	30,632	31,179	31,725	32,268	32,810	33,351
80	27,496	28,059	28,618	29,175	29,730	30,282	30,832	31,380	31,926	32,471	33,013
81	27,125	27,692	28,255	28,815	29,373	29,982	30,481	31,032	31,581	32,127	32,672
82	26,748	27,319	27,887	28,451	29,012	29,571	30,127	30,680	31,232	31,781	32,329
83	26,366	26,942	27,514	28,082	28,647	29,209	29,768	30,325	30,879	31,431	31,981
84	25,977	26,558	27,135	27,708	28,277	28,843	29,405	29,965	30,523	31,078	31,631
85	25,582	26,169	26,750	27,328	27,901	28,471	29,038	29,602	30,162	30,721	31,276
86	25,179	25,772	26,360	26,942	27,521	28,095	28,666	29,233	29,798	30,359	30,918
87	24,768	25,368	25,962	26,550	27,134	27,713	28,289	28,860	29,428	29,994	30,556
88	24,348	24,956	25,557	26,151	26,741	27,325	27,906	28,482	29,054	29,623	30,189
89	23,918	24,534	25,143	25,745	26,341	26,931	27,517	28,098	28,675	29,248	29,818
90	23,476	24,103	24,721	25,330	25,933	26,530	27,121	27,708	28,290	28,868	29,442
91	23,022	23,660	24,288	24,906	25,517	26,121	26,719	27,321	27,899	28,482	29,060
92	22,554	23,205	23,844	24,472	25,092	25,704	26,309	26,908	27,501	28,090	28,673
93	22,068	22,735	23,387	24,027	24,657	25,278	25,891	26,497	27,097	27,691	28,280
94	21,563	22,248	22,916	23,569	24,210	24,841	25,463	26,078	26,685	27,285	27,881
95	21,034	21,741	22,427	23,096	23,751	24,393	25,026	25,649	26,264	26,872	27,474
96	20,474	21,210	21,919	22,606	23,277	23,933	24,576	25,210	25,834	26,450	27,059
97	19,876	20,649	21,386	22,096	22,785	23,457	24,114	24,759	25,394	26,019	26,636
98	19,225	20,049	20,823	21,561	22,273	22,964	23,637	24,296	24,942	25,577	26,204
99		19,395	20,221	20,997	21,737	22,450	23,142	23,817	24,477	25,124	25,761
100			19,565	20,393	21,170	21,913	22,628	23,321	23,997	24,658	25,307
101				19,735	20,564	21,344	22,088	22,805	23,499	24,177	24,839
102					19,904	20,736	21,518	22,263	22,981	23,678	24,356
103						20,074	20,908	21,691	22,438	23,158	23,855
104							20,243	21,079	21,864	22,613	23,334
105								20,413	21,251	22,038	22,788
106									20,582	21,422	22,211
107										20,752	21,594
108											20,921
109											
110											
111											
112											
113											
114											
115											
116											
117											
118											
119											
120											

CENTRE DISTANCE TABLE

$z_2 - z_1$ (rows) / $z_c - z_1$ (columns)

$z_2 - z_1$	112	113	114	115	116	117	118	119	120	121	122	123	124	125	126
61	39,553	40,068	40,584	41,098	41,613	42,127	42,640	43,154	43,667	44,179	44,692	45,204	45,716	46,227	46,738
62	39,254	39,770	40,286	40,801	41,316	41,831	42,345	42,859	43,373	43,886	44,399	44,912	45,424	45,936	46,448
63	38,953	39,470	39,987	40,503	41,019	41,534	42,049	42,564	43,078	43,592	44,106	44,619	45,132	45,645	46,157
64	38,650	39,168	39,686	40,203	40,720	41,236	41,752	42,267	42,782	43,297	43,811	44,325	44,838	45,352	45,865
65	38,346	38,865	39,384	39,902	40,419	40,936	41,453	41,969	42,485	43,000	43,515	44,029	44,544	45,058	45,571
66	38,041	38,561	39,080	39,599	40,117	40,635	41,152	41,669	42,186	42,702	43,217	43,733	44,248	44,762	45,276
67	37,733	38,254	38,775	39,295	39,814	40,332	40,851	41,368	41,886	42,402	42,919	43,435	43,950	44,466	44,980
68	37,424	37,946	38,468	38,988	39,509	40,028	40,547	41,066	41,584	42,102	42,619	43,136	43,652	44,168	44,683
69	37,114	37,637	38,159	38,681	39,202	39,723	40,243	40,762	41,281	41,799	42,317	42,835	43,352	43,869	44,385
70	36,801	37,325	37,849	38,371	38,894	39,415	39,936	40,457	40,976	41,496	42,015	42,533	43,051	43,568	44,085
71	36,486	37,012	37,536	38,060	38,584	39,106	39,628	40,150	40,670	41,191	41,710	42,229	42,748	43,266	43,784
72	36,170	36,696	37,222	37,747	38,272	38,795	39,318	39,841	40,363	40,884	41,404	41,924	42,444	42,963	43,482
73	35,851	36,379	36,906	37,432	37,958	38,483	39,007	39,530	40,053	40,575	41,097	41,618	42,138	42,658	43,178
74	35,530	36,059	36,588	37,116	37,643	38,169	38,694	39,218	39,742	40,265	40,788	41,310	41,831	42,352	42,872
75	35,207	35,738	36,268	36,797	37,325	37,852	38,379	38,904	39,429	39,954	40,477	41,000	41,523	42,044	42,566
76	34,881	35,414	35,945	36,476	37,005	37,534	38,062	38,589	39,115	39,640	40,165	40,689	41,212	41,735	42,257
77	34,554	35,088	35,621	36,153	36,684	37,214	37,743	38,271	38,798	39,325	39,851	40,376	40,900	41,424	41,947
78	34,223	34,759	35,294	35,827	36,360	36,891	37,422	37,951	38,480	39,008	39,535	40,061	40,587	41,111	41,636
79	33,890	34,428	34,964	35,500	36,034	36,567	37,099	37,630	38,160	38,689	39,217	39,745	40,271	40,797	41,322
80	33,554	34,094	34,632	35,169	35,705	36,240	36,773	37,306	37,837	38,368	38,897	39,426	39,954	40,481	41,007
81	33,216	33,758	34,298	34,837	35,374	35,911	36,446	36,980	37,513	38,045	38,576	39,106	39,635	40,163	40,691
82	32,874	33,418	33,960	34,501	35,041	35,579	36,116	36,651	37,186	37,719	38,252	38,783	39,314	39,843	40,372
83	32,529	33,076	33,620	34,163	34,705	35,245	35,783	36,321	36,857	37,392	37,926	38,459	38,991	39,521	40,052
84	32,181	32,730	33,277	33,822	34,366	34,908	35,448	35,987	36,525	37,062	37,597	38,132	38,665	39,198	39,729
85	31,830	32,381	32,930	33,478	34,024	34,568	35,110	35,652	36,191	36,730	37,267	37,803	38,338	38,872	39,405
86	31,474	32,029	32,581	33,131	33,679	34,225	34,770	35,313	35,855	36,395	36,934	37,472	38,008	38,544	39,078
87	31,115	31,673	32,227	32,780	33,331	33,879	34,426	34,972	35,515	36,058	36,598	37,138	37,676	38,213	38,749
88	30,752	31,312	31,870	32,426	32,979	33,530	34,080	34,627	35,173	35,718	36,260	36,802	37,342	37,880	38,418
89	30,385	30,948	31,509	32,068	32,624	33,178	33,730	34,280	34,828	35,375	35,919	36,463	37,005	37,545	38,085
90	30,012	30,580	31,144	31,706	32,265	32,822	33,377	33,929	34,480	35,029	35,576	36,121	36,665	37,208	37,749
91	29,635	30,207	30,775	31,340	31,903	32,462	33,020	33,575	34,128	34,680	35,229	35,777	36,323	36,867	37,410
92	29,253	29,829	30,401	30,970	31,536	32,099	32,659	33,218	33,774	34,327	34,879	35,429	35,978	36,524	37,069
93	28,865	29,445	30,022	30,595	31,164	31,731	32,295	32,856	33,415	33,972	34,526	35,079	35,629	36,178	36,725
94	28,471	29,056	29,637	30,215	30,788	31,359	31,926	32,491	33,053	33,612	34,170	34,725	35,278	35,829	36,378
95	28,070	28,661	29,247	29,829	30,407	30,982	31,553	32,121	32,687	33,249	33,810	34,367	34,923	35,477	36,029
96	27,662	28,259	28,851	29,438	30,021	30,600	31,175	31,747	32,316	32,882	33,446	34,006	34,565	35,121	35,676
97	27,246	27,850	28,448	29,041	29,629	30,213	30,792	31,369	31,941	32,511	33,078	33,642	34,203	34,762	35,319
98	26,822	27,433	28,038	28,637	29,231	29,820	30,404	30,985	31,562	32,135	32,705	33,273	33,838	34,400	34,960
99	26,389	27,008	27,620	28,226	28,826	29,420	30,010	30,595	31,177	31,754	32,329	32,900	33,468	34,033	34,596
100	25,945	26,573	27,194	27,807	28,414	29,014	29,610	30,200	30,787	31,369	31,947	32,522	33,094	33,663	34,229
101	25,489	26,128	26,758	27,379	27,993	28,601	29,203	29,799	30,390	30,977	31,560	32,140	32,715	33,288	33,857
102	25,020	25,671	26,311	26,942	27,565	28,180	28,788	29,391	29,988	30,580	31,168	31,752	32,332	32,908	33,482
103	24,535	25,200	25,853	26,494	27,126	27,750	28,366	28,976	29,579	30,177	30,770	31,359	31,943	32,524	33,101
104	24,034	24,715	25,381	26,035	26,678	27,311	27,935	28,552	29,163	29,767	30,366	30,960	31,549	32,135	32,716
105	23,511	24,212	24,894	25,562	26,217	26,860	27,494	28,120	28,738	29,350	29,955	30,555	31,149	31,740	32,326
106	22,963	23,687	24,389	25,073	25,743	26,398	27,043	27,678	28,305	28,924	29,536	30,142	30,743	31,339	31,930
107	22,384	23,138	23,864	24,567	25,253	25,923	26,580	27,226	27,862	28,490	29,110	29,723	30,330	30,932	31528
108	21,765	22,558	23,313	24,040	24,745	25,432	26,103	26,761	27,408	28,046	28,674	29,295	29,909	30,517	31,120
109	21,090	21,936	22,731	23,488	24,217	24,923	25,611	26,283	26,943	27,591	28,229	28,859	29,481	30,096	30,705
110		21,260	22,108	22,904	23,663	24,393	25,100	25,790	26,463	27,124	27,773	28,412	29,043	29,666	30,282
111			21,429	22,279	23,077	23,837	24,569	25,278	25,968	26,643	27,305	27,955	28,596	29,227	29,851
112				21,598	22,450	23,250	24,012	24,745	25,455	26,147	26,823	27,486	28,137	28,779	29,411
113					21,768	22,621	23,423	24,186	24,921	25,632	26,325	27,003	27,667	28,319	28,962
114						21,937	22,792	23,595	24,360	25,096	25,809	26,504	27,182	27,847	28,501
115							22,106	22,963	23,768	24,535	25,272	25,986	26,682	27,362	28,028
116								22,275	23,134	23,941	24,709	25,448	26,163	26,860	27,541
117									22,443	23,304	24,113	24,882	25,623	26,340	27,038
118										22,612	23,475	24,285	25,056	25,798	26,516
119											22,781	23,646	24,457	25,230	25,973
120												22,949	23,816	24,630	25,404

$z_2 - z_1$ \ $z_c - z_1$	127	128	129	130	131	132	133	134	135	136	137	138	139	140	141
61	47,249	47,760	48,271	48,781	49,291	49,801	50,311	50,820	51,330	51,839	52,348	52,856	53,365	53,873	54,382
62	46,960	47,471	47,982	48,493	49,004	49,514	50,024	50,534	51,044	51,553	52,062	52,572	53,081	53,589	54,098
63	46,669	47,181	47,693	48,204	48,715	49,226	49,736	50,247	50,757	51,267	51,777	52,286	52,795	53,305	53,814
64	46,377	46,890	47,402	47,914	48,425	48,936	49,448	49,958	50,469	50,979	51,490	52,000	52,509	53,019	53,528
65	46,084	46,597	47,110	47,622	48,134	48,646	49,158	49,669	50,180	50,691	51,202	51,712	52,222	52,732	53,242
66	45,790	46,304	46,817	47,330	47,843	48,355	48,867	49,379	49,891	50,402	50,913	51,424	51,934	52,445	52,955
67	45,495	46,009	46,523	47,036	47,550	48,063	48,575	49,088	49,600	50,112	50,623	51,135	51,646	52,157	52,667
68	45,198	45,713	46,228	46,742	47,256	47,769	48,282	48,795	49,308	49,820	50,332	50,844	51,356	51,867	52,378
69	44,901	45,416	45,931	46,446	46,960	47,475	47,988	48,502	49,015	49,528	50,041	50,553	51,065	51,577	52,088
70	44,602	45,118	45,634	46,149	46,664	47,179	47,693	48,207	48,721	49,235	49,748	50,261	50,773	51,286	51,798
71	44,301	44,818	45,335	45,851	46,367	46,882	47,397	47,912	48,426	48,940	49,454	49,967	50,480	50,993	51,506
72	44,000	44,517	45,035	45,551	46,068	46,584	47,099	47,615	48,130	48,644	49,159	49,673	50,186	50,700	51,213
73	43,697	44,215	44,733	45,251	45,768	46,284	46,801	47,317	47,832	48,348	48,863	49,377	49,891	50,405	50,919
74	43,392	43,911	44,430	44,948	45,466	45,984	46,501	47,018	47,534	48,050	48,565	49,080	49,595	50,110	50,624
75	43,086	43,606	44,126	44,645	45,164	45,682	46,200	46,717	47,234	47,751	48,267	48,783	49,298	49,813	50,328
76	42,779	43,300	43,820	44,340	44,860	45,379	45,897	46,415	46,933	47,450	47,967	48,484	49,000	49,516	50,031
77	42,470	42,992	43,513	44,034	44,554	45,074	45,593	46,112	46,631	47,149	47,666	48,183	48,700	49,217	49,733
78	42,159	42,682	43,204	43,726	44,247	44,768	45,288	45,808	46,327	46,846	47,364	47,882	48,399	48,917	49,433
79	41,847	42,371	42,894	43,417	43,939	44,460	44,981	45,502	46,022	46,542	47,061	47,579	48,097	48,615	49,133
80	41,533	42,058	42,582	43,106	43,629	44,152	44,673	45,195	45,716	46,236	46,756	47,275	47,794	48,313	48,831
81	41,217	41,744	42,269	42,794	43,318	43,841	44,364	44,886	45,408	45,929	46,450	46,970	47,490	48,009	48,528
82	40,900	41,427	41,954	42,479	43,005	43,529	44,053	44,576	45,099	45,621	46,142	46,663	47,184	47,704	48,223
83	40,581	41,109	41,637	42,164	42,690	43,215	43,740	44,264	44,788	45,311	45,833	46,355	46,877	47,397	47,918
84	40,260	40,789	41,318	41,846	42,373	42,900	43,426	43,951	44,476	45,000	45,523	46,046	46,568	47,090	47,611
85	39,936	40,467	40,997	41,527	42,055	42,583	43,110	43,636	44,162	44,687	45,211	45,735	46,258	46,780	47,302
86	39,611	40,144	40,675	41,206	41,735	42,264	42,792	43,320	43,846	44,372	44,897	45,422	45,946	46,470	46,993
87	39,284	39,818	40,351	40,882	41,413	41,943	42,473	43,001	43,529	44,056	44,582	45,108	45,633	46,158	46,681
88	38,954	39,490	40,024	40,557	41,090	41,621	42,151	42,681	43,210	43,738	44,266	44,792	45,318	45,844	46,369
89	38,623	39,159	39,695	40,230	40,764	41,296	41,828	42,359	42,889	43,419	43,947	44,475	45,002	45,529	46,054
90	38,288	38,827	39,364	39,901	40,436	40,970	41,503	42,035	42,567	43,097	43,627	44,156	44,684	45,212	45,739
91	37,952	38,492	39,031	39,569	40,106	40,641	41,176	41,710	42,242	42,774	43,305	43,835	44,365	44,893	45,421
92	37,613	38,155	38,696	39,235	39,773	40,311	40,847	41,382	41,916	42,449	42,981	43,513	44,043	44,573	45,102
93	37,271	37,815	38,358	38,899	39,439	39,978	40,515	41,052	41,588	42,122	42,656	43,188	43,720	44,251	44,781
94	36,926	37,472	38,017	38,560	39,102	39,642	40,182	40,720	41,257	41,793	42,328	42,862	43,395	43,927	44,459
95	36,579	37,127	37,674	38,219	38,762	39,305	39,846	40,386	40,924	41,462	41,998	42,534	43,068	43,602	44,134
96	36,228	36,779	37,327	37,875	38,420	38,965	39,507	40,049	40,589	41,128	41,666	42,203	42,739	43,274	43,808
97	35,874	36,427	36,978	37,528	38,076	38,622	39,166	39,710	40,252	40,793	41,332	41,871	42,408	42,944	43,480
98	35,517	36,073	36,626	37,178	37,728	38,276	38,823	39,368	39,912	40,455	40,996	41,536	42,075	42,613	43,150
99	35,157	35,715	36,271	36,825	37,377	37,928	38,477	39,024	39,570	40,114	40,657	41,199	41,740	42,279	42,817
100	34,792	35,353	35,912	36,469	37,024	37,577	38,128	38,677	39,225	39,771	40,316	40,860	41,402	41,943	42,483
101	34,424	34,988	35,550	36,110	36,667	37,222	37,776	38,327	38,877	39,426	39,972	40,518	41,062	41,605	42,146
102	34,052	34,619	35,184	35,747	36,307	36,865	37,421	37,974	38,527	39,077	39,626	40,173	40,719	41,264	41,807
103	33,675	34,246	34,814	35,380	35,943	36,504	37,062	37,619	38,173	38,726	39,277	39,826	40,374	40,921	41,466
104	33,294	33,869	34,440	35,009	35,575	36,139	36,700	37,259	37,817	38,372	38,925	39,477	40,027	40,575	41,122
105	32,908	33,487	34,062	34,634	35,204	35,771	36,335	36,897	37,457	38,014	38,570	39,124	39,676	40,227	40,775
106	32,517	33,100	33,679	34,255	34,828	35,398	35,966	36,531	37,093	37,654	38,212	38,768	39,323	39,875	40,426
107	32,120	32,708	33,291	33,872	34,448	35,022	35,593	36,161	36,726	37,290	37,851	38,409	38,966	39,521	40,074
108	31,717	32,310	32,898	33,483	34,064	34,641	35,215	35,787	36,356	36,922	37,486	38,047	38,607	39,164	39,720
109	31,308	31,906	32,500	33,089	33,674	34,256	34,834	35,409	35,981	36,550	37,117	37,682	38,244	38,804	39,362
110	30,892	31,496	32,095	32,689	33,279	33,865	34,447	35,026	35,602	36,175	36,745	37,312	37,877	38,440	39,001
111	30,468	31,079	31,684	32,284	32,879	33,469	34,056	34,639	35,219	35,795	36,369	36,939	37,507	38,073	38,636
112	30,036	30,654	31,266	31,871	32,472	33,068	33,659	34,247	34,831	35,411	35,988	36,562	37,133	37,702	38,268
113	29,595	30,221	30,840	31,452	32,059	32,660	33,257	33,849	34,438	35,022	35,603	36,181	36,756	37,328	37,897
114	29,144	29,779	30,406	31,026	31,639	32,246	32,849	33,446	34,039	34,628	35,213	35,795	36,373	36,949	37,521
115	28,683	39,327	32,963	30,591	31,211	31,825	32,434	33,037	33,635	34,229	34,819	35,404	35,987	36,566	37,142
116	28,208	28,864	29,510	30,146	30,775	31,397	32,012	32,621	33,225	33,824	34,418	35,009	35,595	36,178	36,758
117	27,720	28,388	29,045	29,692	30,330	30,959	31,582	32,198	32,808	33,413	34,012	34,608	35,199	35,786	36,370
118	27,216	27,899	28,569	29,227	29,875	30,513	31,144	31,767	32,384	32,995	33,600	34,201	34,797	35,389	35,977
119	26,693	27,394	28,078	28,749	29,408	30,057	30,697	31,328	31,952	32,570	33,182	33,788	34,389	34,986	35,579
120	26,149	26,870	27,571	28,258	28,929	29,590	30,239	30,880	31,512	32,137	32,756	33,368	33,975	34,577	35,175

CENTRE DISTANCE TABLE

$z_2 - z_1$ \ $z_c - z_1$	142	143	144	145	146	147	148	149	150	151	152	153	154	155	156
61	54,890	55,398	55,905	56,413	56,920	57,428	57,935	58,442	58,949	59,456	59,963	60,469	60,976	61,482	61,989
62	54,606	55,115	55,623	56,131	56,639	57,146	57,654	58,161	58,669	59,176	59,683	60,190	60,697	61,203	61,710
63	54,322	54,831	55,340	55,848	56,356	56,864	57,372	57,880	58,387	58,895	59,402	59,909	60,417	60,923	61,430
64	54,038	54,547	55,055	55,564	56,073	56,581	57,089	57,597	58,105	58,613	59,121	59,628	60,136	60,643	61,150
65	53,752	54,261	54,771	55,280	55,789	56,297	56,806	57,314	57,823	58,331	58,839	59,346	59,854	60,362	60,869
66	53,465	53,975	54,485	54,994	55,503	56,013	56,522	57,030	57,539	58,047	58,556	59,064	59,572	60,080	60,588
67	53,178	53,688	54,198	54,708	55,218	55,727	56,236	56,746	57,255	57,763	58,272	58,781	59,289	59,797	60,305
68	52,889	53,400	53,910	54,421	54,931	55,441	55,950	56,460	56,969	57,479	57,988	58,496	59,005	59,514	60,022
69	52,600	53,111	53,622	54,133	54,643	55,154	55,664	56,174	56,683	57,193	57,702	58,211	58,721	59,229	59,738
70	52,310	52,821	53,333	53,844	54,355	54,865	55,376	55,886	56,396	56,906	57,416	57,926	58,435	58,944	59,454
71	52,018	52,530	53,042	53,554	54,065	54,576	55,087	55,598	56,109	56,619	57,129	57,639	58,149	58,659	59,168
72	51,726	52,238	52,751	53,263	53,775	54,286	54,798	55,309	55,820	56,331	56,841	57,352	57,862	58,372	58,882
73	51,433	51,946	52,459	52,971	53,483	53,996	54,507	55,019	55,531	56,042	56,553	57,064	57,574	58,085	58,595
74	51,138	51,652	52,165	52,678	53,191	53,704	54,216	54,728	55,240	55,752	56,263	56,774	57,285	57,796	58,307
75	50,843	51,357	51,871	52,385	52,898	53,411	53,924	54,436	54,949	55,461	55,973	56,484	56,996	57,507	58,018
76	50,546	51,061	51,575	52,090	52,604	53,117	53,631	54,144	54,656	55,169	55,681	56,194	56,705	57,217	57,729
77	50,249	50,764	51,279	51,794	52,308	52,822	53,336	53,850	54,363	54,876	55,389	55,902	56,414	56,926	57,438
78	49,950	50,466	50,981	51,497	52,012	52,527	53,041	53,555	54,069	54,583	55,096	55,609	56,122	56,634	57,147
79	49,650	50,166	50,683	51,199	51,714	52,230	52,745	53,259	53,774	54,288	54,802	55,315	55,829	56,342	56,854
80	49,349	49,866	50,383	50,899	51,416	51,932	52,447	52,962	53,477	53,992	54,506	55,021	55,534	56,048	56,561
81	49,046	49,564	50,082	50,599	51,116	51,633	52,149	52,665	53,180	53,695	54,210	54,725	55,239	55,753	56,267
82	48,743	49,261	49,780	50,298	50,815	51,332	51,849	52,366	52,882	53,398	53,913	54,428	54,943	55,458	55,972
83	48,438	48,957	49,476	49,995	50,513	51,031	51,548	52,066	52,582	53,099	53,615	54,130	54,648	55,161	55,676
84	48,132	48,652	49,172	49,691	50,210	50,728	51,247	51,764	52,282	52,799	53,315	53,832	54,348	54,863	55,379
85	47,824	48,345	48,866	49,386	49,905	50,425	50,943	51,462	51,980	52,498	53,015	53,532	54,048	54,565	55,081
86	47,515	48,037	48,558	49,079	49,600	50,120	50,639	51,158	51,677	52,195	52,713	53,231	53,748	54,265	54,781
87	47,205	47,727	48,250	48,771	49,293	49,813	50,334	50,853	51,373	51,892	52,410	52,929	53,447	53,964	54,481
88	46,893	47,417	47,940	48,462	48,984	49,506	50,027	50,547	51,068	51,587	52,107	52,625	53,144	53,662	54,180
89	46,580	47,104	47,628	48,152	48,674	49,197	49,719	50,240	50,761	51,281	51,801	52,321	52,840	53,359	53,877
90	46,265	46,790	47,315	47,840	48,363	48,887	49,409	49,931	50,453	50,974	51,495	52,015	52,535	53,055	53,574
91	45,948	46,475	47,001	47,526	48,051	48,575	49,098	49,621	50,144	50,666	51,187	51,709	52,229	52,749	53,269
92	45,630	46,158	46,685	47,211	47,737	48,262	48,786	49,310	49,833	50,356	50,879	51,400	51,922	52,443	52,963
93	45,311	45,839	46,367	46,895	47,421	47,947	48,473	48,997	49,522	50,045	50,568	51,091	51,613	52,135	52,656
94	44,989	45,519	46,048	46,576	47,104	47,631	48,157	48,683	49,208	49,733	50,257	50,780	51,303	51,826	52,348
95	44,666	45,197	45,727	46,257	46,785	47,313	47,841	48,367	48,893	49,419	49,944	50,468	50,992	51,515	52,038
96	44,341	44,873	45,405	45,935	46,465	46,994	47,522	48,050	48,577	49,104	49,629	50,155	50,679	51,203	51,727
97	44,014	44,548	45,080	45,612	46,143	46,673	47,203	47,731	48,259	48,787	49,314	49,840	50,365	50,890	51,415
98	43,685	44,220	44,754	45,287	45,819	46,351	46,881	47,411	47,940	48,468	48,996	49,523	50,050	50,576	51,101
99	43,354	43,891	44,426	44,960	45,494	46,026	46,558	47,089	47,619	48,149	48,677	49,205	49,733	50,260	50,786
100	43,021	43,559	44,096	44,631	45,166	45,700	46,233	46,765	47,296	47,827	48,357	48,886	49,415	49,942	50,470
101	42,686	43,226	43,764	44,301	44,837	45,372	45,906	46,440	46,972	47,504	48,035	48,656	49,095	49,623	50,152
102	42,349	42,890	43,429	43,968	44,505	45,042	45,578	46,112	46,646	47,179	47,711	48,242	48,773	49,303	49,832
103	42,009	42,552	43,093	43,633	44,172	44,710	45,247	45,783	46,318	46,852	47,386	47,918	48,450	48,981	49,511
104	41,667	42,212	42,754	43,296	43,837	44,376	44,914	45,452	45,988	46,524	47,058	47,592	48,125	48,657	49,188
105	41,323	41,869	42,414	42,957	43,499	44,040	44,580	45,119	45,656	46,193	46,729	47,264	47,798	48,331	48,864
106	40,976	41,524	42,070	42,615	43,159	43,702	44,243	44,784	45,323	45,861	46,398	46,934	47,470	48,004	48,538
107	40,626	41,176	41,724	42,271	42,817	43,361	43,904	44,446	44,987	45,527	46,065	46,603	47,140	47,675	48,210
108	40,273	40,825	41,376	41,925	42,472	43,018	43,563	44,107	44,649	45,190	45,730	46,269	46,807	47,344	47,881
109	39,918	40,472	41,025	41,576	42,125	42,673	43,220	43,765	44,309	44,852	45,393	45,934	46,473	47,012	47,549
110	39,559	40,116	40,671	41,224	41,775	42,325	42,874	43,421	43,966	44,511	45,054	45,596	46,137	46,677	47,216
111	39,197	39,757	40,314	40,869	41,423	41,975	42,525	43,074	43,622	44,168	44,713	45,256	45,799	46,340	46,881
112	38,832	39,394	39,954	40,511	41,067	41,622	42,174	42,725	43,274	43,822	44,369	44,914	45,459	46,001	46,543
113	38,464	39,028	39,591	40,151	40,709	41,265	41,820	42,373	42,925	43,475	44,023	44,570	45,116	45,661	46,204
114	38,091	38,659	39,224	39,787	40,348	40,906	41,463	42,019	42,572	43,124	43,674	44,223	44,771	45,317	45,862
115	37,715	38,286	38,854	39,420	39,983	40,544	41,104	41,661	42,217	42,771	43,323	43,874	44,424	44,972	45,518
116	37,335	37,909	38,480	39,049	39,615	40,179	40,471	41,301	41,859	42,415	42,970	43,523	44,074	44,624	45,172
117	36,950	37,528	38,102	38,674	39,243	39,810	40,375	40,937	41,498	42,056	42,613	43,168	43,722	44,273	44,824
118	36,561	37,143	37,721	38,296	38,868	39,438	40,005	40,571	41,134	41,695	42,254	42,811	43,366	43,920	44,473
119	36,167	36,753	37,334	37,913	38,489	39,062	39,632	40,200	40,766	41,330	41,891	42,451	43,009	43,565	44,119
120	35,768	36,358	36,944	37,526	38,106	38,682	39,256	39,827	40,395	40,961	41,526	42,088	42,648	43,206	43,763

$z_2 - z_1$ \ $z_c - z_1$	157	158	159	160	161	162	163	164	165	166	167	168	169	170	171
61	62,495	63,001	63,507	64,013	64,519	65,024	65,530	66,036	66,541	67,046	67,552	68,057	68,562	69,067	69,572
62	62,216	62,723	63,229	63,735	64,241	64,747	65,253	65,759	66,264	66,770	67,275	67,781	68,286	68,792	69,297
63	61,937	62,444	62,950	63,457	63,963	64,469	64,975	65,481	65,987	66,493	66,999	67,504	68,010	68,515	69,021
64	61,657	62,164	62,671	63,178	63,684	64,191	64,697	65,203	65,709	66,215	66,721	67,227	67,733	68,239	68,744
65	61,377	61,884	62,391	62,898	63,405	63,911	64,418	64,924	65,431	65,937	66,443	66,950	67,456	67,962	68,467
66	61,095	61,603	62,110	62,617	63,124	63,631	64,138	64,645	65,152	65,658	66,165	66,671	67,178	67,684	68,190
67	60,813	61,321	61,829	62,336	62,844	63,351	63,858	64,365	64,872	65,379	65,886	66,392	66,899	67,405	67,912
68	60,530	61,038	61,546	62,054	62,562	63,070	63,577	64,084	64,592	65,099	65,606	66,113	66,619	67,126	67,633
69	60,247	60,755	61,264	61,772	62,280	62,788	63,295	63,803	64,311	64,818	65,325	65,832	66,339	66,846	67,353
70	59,962	60,471	60,980	61,488	61,997	62,505	63,013	63,521	64,029	64,536	65,044	65,551	66,059	66,566	67,073
71	59,677	60,187	60,695	61,204	61,713	62,222	62,730	63,238	63,746	64,254	64,762	65,270	65,777	66,285	66,792
72	59,391	59,901	60,410	60,919	61,428	61,937	62,446	62,955	63,463	63,971	64,480	64,988	65,495	66,003	66,511
73	59,105	59,615	60,124	60,634	61,143	61,652	62,161	62,670	63,179	63,688	64,196	64,705	65,213	65,721	66,229
74	58,817	59,328	59,838	60,348	60,857	61,367	61,876	62,385	62,894	63,403	63,912	64,421	64,929	65,438	65,946
75	58,529	59,040	59,550	60,060	60,570	61,080	61,590	62,100	62,609	63,118	63,627	64,136	64,645	65,154	65,662
76	58,240	58,751	59,262	59,772	60,283	60,793	61,303	61,813	62,323	62,833	63,342	63,851	64,360	64,869	65,378
77	57,950	58,461	58,972	59,484	59,994	60,505	61,016	61,526	62,036	62,546	63,056	63,565	64,075	64,584	65,093
78	57,659	58,171	58,682	59,194	59,705	60,216	60,727	61,238	61,748	62,259	62,769	63,279	63,789	64,298	64,808
79	57,367	57,879	58,391	58,903	59,415	59,927	60,438	60,949	61,460	61,971	62,481	62,991	63,502	64,012	64,521
80	57,074	57,587	58,100	58,612	59,124	59,636	60,148	60,659	61,171	61,682	62,193	62,703	63,214	63,724	64,234
81	56,781	57,294	57,807	58,320	58,832	59,345	59,857	60,369	60,880	61,392	61,903	62,414	62,925	63,436	63,947
82	56,486	57,000	57,513	58,027	58,540	59,052	59,565	60,077	60,589	61,101	61,613	62,125	62,636	63,147	63,658
83	56,190	56,705	57,219	57,732	58,246	58,759	59,272	59,785	60,298	60,810	61,322	61,834	62,346	62,857	63,369
84	55,894	56,409	56,923	57,437	57,951	58,465	58,979	59,492	60,005	60,518	61,030	61,543	62,055	62,567	63,078
85	55,596	56,112	56,627	57,141	57,656	58,170	58,684	59,198	59,711	60,225	60,738	61,250	61,763	62,275	62,787
86	55,298	55,814	56,329	56,844	57,359	57,874	58,389	58,903	59,417	59,931	60,444	60,957	61,470	61,983	62,496
87	54,998	55,515	56,031	56,547	57,062	57,577	58,092	58,607	59,121	59,636	60,150	60,663	61,177	61,690	62,203
88	54,697	55,214	55,731	56,248	56,764	57,279	57,795	58,310	58,825	59,340	59,854	60,368	60,882	61,396	61,909
89	54,396	54,913	55,431	55,948	56,464	56,981	57,497	58,012	58,528	59,043	59,558	60,073	60,587	61,101	61,615
90	54,093	54,611	55,129	55,646	56,164	56,681	57,197	57,714	58,230	58,745	59,261	59,776	60,291	60,805	61,320
91	53,789	54,308	54,826	55,344	55,862	56,380	56,897	57,414	57,930	58,447	58,963	59,478	59,994	60,509	61,024
92	53,483	54,003	54,522	55,041	55,560	56,078	56,596	57,113	57,630	58,147	58,663	59,180	59,696	60,211	60,726
93	53,177	53,697	54,217	54,737	55,256	55,775	56,293	56,811	57,329	57,846	58,363	58,880	59,396	59,913	60,428
94	52,869	53,390	53,911	54,431	54,951	55,470	55,990	56,508	57,027	57,545	58,062	58,579	59,096	59,613	60,130
95	52,560	53,082	53,604	54,125	54,645	55,165	55,685	56,204	56,723	57,242	57,760	58,278	58,795	59,313	59,830
96	52,250	52,773	53,295	53,817	54,338	54,859	55,379	55,899	56,419	56,938	57,457	57,975	58,493	59,011	59,529
97	51,939	52,462	52,985	53,507	54,029	54,551	55,072	55,593	56,113	56,633	57,152	57,672	58,190	58,709	59,227
98	51,626	52,150	52,674	53,197	53,720	54,242	54,764	55,285	55,806	56,327	56,847	57,367	57,886	58,405	58,924
99	51,312	51,837	52,361	52,885	53,409	53,932	54,455	54,977	55,498	56,020	56,540	57,061	57,581	58,101	58,620
100	50,996	51,522	52,048	52,572	53,097	53,621	54,144	54,667	55,189	55,711	56,233	56,754	57,275	57,795	58,315
101	50,679	51,206	51,732	52,258	52,783	53,308	53,832	54,356	54,879	55,402	55,924	56,446	56,967	57,488	58,009
102	50,361	50,888	51,416	51,942	52,468	52,994	53,519	54,043	54,567	55,091	55,614	56,136	56,658	57,180	57,701
103	50,040	50,569	51,098	51,625	52,152	52,679	53,204	53,730	54,254	54,779	55,303	55,826	56,349	56,871	57,393
104	49,719	50,249	50,778	51,307	51,835	52,362	52,889	53,415	53,940	54,465	54,990	55,514	56,038	56,561	57,083
105	49,396	499,927	50,457	50,986	51,515	52,044	52,571	53,098	53,625	54,151	54,676	55,201	55,725	56,249	56,773
106	49,071	49,603	50,134	50,665	51,195	51,724	52,253	52,781	53,308	53,835	54,361	54,887	55,412	55,937	56,461
107	48,744	49,277	49,810	50,342	50,873	51,403	51,932	52,461	52,990	53,517	54,045	54,571	55,097	55,623	56,148
108	48,416	48,950	49,484	50,017	50,549	51,080	51,611	52,141	52,670	53,199	53,727	54,254	54,781	55,307	55,833
109	48,086	48,621	49,156	49,690	50,223	50,756	51,288	51,818	52,349	52,878	53,407	53,936	54,463	54,991	55,517
110	47,754	48,291	48,827	49,362	49,896	50,430	50,963	51,495	52,026	52,557	53,087	53,616	54,145	54,673	55,200
111	47,420	47,958	48,496	49,032	49,568	50,102	50,636	51,169	51,702	52,233	52,764	53,295	53,824	54,353	54,882
112	47,084	47,624	48,162	48,700	49,237	49,773	50,308	50,842	51,376	51,909	52,441	52,972	53,503	54,033	54,562
113	46,746	47,287	47,827	48,367	48,905	49,442	49,978	50,514	51,048	51,582	52,115	52,648	53,179	53,710	54,241
114	46,406	46,949	47,490	48,031	48,570	49,109	49,647	50,183	50,719	51,254	51,788	52,322	52,855	53,387	53,918
115	46,064	46,608	47,151	47,693	48,234	48,774	49,313	49,851	50,388	50,924	51,460	51,994	52,528	53,061	53,594
116	45,720	46,265	46,810	47,354	47,896	48,437	48,978	49,517	50,055	50,593	51,130	51,665	52,200	52,734	53,268
117	45,373	45,920	46,467	47,012	47,556	48,099	48,640	49,181	49,721	50,260	50,798	51,335	51,871	52,406	52,940
118	45,024	45,573	46,121	46,668	47,214	47,758	48,301	48,843	49,384	49,925	50,464	51,002	51,539	52,076	52,611
119	44,672	45,223	45,773	46,322	46,869	47,415	47,960	48,503	49,046	49,588	50,128	50,668	51,206	51,744	52,281
120	44,318	44,871	45,423	45,973	46,522	47,070	47,616	48,161	48,706	49,249	49,790	50,331	50,871	51,410	51,948

CENTRE DISTANCE TABLE

$z_2 - z_1$	$z_c - z_1$														
	172	173	174	175	176	177	178	179	180	181	182	183	184	185	186
61	70,077	70,582	71,086	71,591	72,096	72,600	73,105	73,609	74,114	74,618	75,122	75,626	76,131	76,635	77,139
62	69,802	70,307	70,812	71,317	71,822	72,326	72,831	73,336	73,840	74,345	74,849	75,353	75,858	76,362	76,866
63	69,526	70,031	70,537	71,042	71,547	72,052	72,557	73,061	73,566	74,071	74,575	75,080	75,584	76,089	76,593
64	69,250	69,755	70,261	70,766	71,271	71,776	72,282	72,787	73,292	73,796	74,301	74,806	75,311	75,815	76,320
65	68,973	69,479	69,984	70,490	70,995	71,501	72,006	72,511	73,016	73,521	74,026	74,531	75,036	75,541	76,046
66	68,696	69,202	69,708	70,213	70,719	71,224	71,730	72,235	72,741	73,246	73,751	74,256	74,761	75,266	75,771
67	68,418	68,924	69,430	69,936	70,442	70,948	71,453	71,959	72,464	72,970	73,475	73,981	74,486	74,991	75,496
68	68,139	68,646	69,152	69,658	70,164	70,670	71,176	71,682	72,188	72,693	73,199	73,704	74,210	74,715	75,221
69	67,860	68,367	68,873	69,379	69,886	70,392	70,898	71,404	71,910	72,416	72,922	73,428	73,933	74,439	74,944
70	67,580	68,087	68,594	69,100	69,607	70,113	70,620	71,126	71,632	72,138	72,644	73,150	73,656	74,162	74,668
71	67,300	67,807	68,314	68,821	69,327	69,834	70,341	70,847	71,354	71,860	72,366	72,873	73,379	73,885	74,391
72	67,018	67,526	68,033	68,540	69,047	69,554	70,061	70,568	71,075	71,581	72,088	72,594	73,100	73,607	74,113
73	66,737	67,244	67,752	68,259	68,767	69,274	69,781	70,288	70,795	71,302	71,808	72,315	72,822	73,328	73,834
74	66,454	66,962	67,470	67,978	68,485	68,993	69,500	70,007	70,515	71,022	71,529	72,036	72,542	73,049	73,556
75	66,171	66,679	67,187	67,695	68,203	68,711	69,219	69,726	70,234	70,741	71,248	71,755	72,262	72,769	73,276
76	65,887	66,396	66,904	67,412	67,921	68,429	68,937	69,444	69,952	70,460	70,967	71,474	71,982	72,489	72,996
77	65,602	66,111	66,620	67,129	67,637	68,146	68,654	69,162	69,670	70,178	70,685	71,193	71,701	72,208	72,715
78	65,317	65,826	66,335	66,844	67,353	67,862	68,370	68,879	69,387	69,895	70,403	70,911	71,419	71,926	72,434
79	65,031	65,541	66,050	66,559	67,068	67,577	68,086	68,595	69,103	69,612	70,120	70,628	71,136	71,644	72,152
80	64,744	65,254	65,764	66,274	66,783	67,292	67,801	68,310	68,819	69,328	69,837	70,345	70,853	71,362	71,870
81	64,457	64,967	65,477	65,987	66,497	67,006	67,516	68,025	68,534	69,043	39,552	70,061	70,570	71,078	71,587
82	64,169	64,679	65,190	65,700	66,210	66,720	67,230	67,739	68,249	68,758	69,267	69,776	70,285	70,794	71,303
83	63,880	64,391	64,901	65,412	65,922	66,433	66,943	67,453	67,963	68,472	68,982	69,491	70,000	70,509	71,018
84	63,590	64,101	64,612	65,123	65,634	66,145	66,655	67,165	67,676	68,186	68,695	69,205	69,715	70,224	70,733
85	63,299	63,811	64,323	64,834	65,345	65,856	66,367	66,877	67,388	67,898	68,408	68,918	69,428	69,938	70,448
86	63,008	63,520	64,032	64,544	65,055	65,567	66,078	66,589	67,100	67,610	68,121	68,631	69,141	69,651	70,161
87	62,716	63,228	63,741	64,253	64,765	65,276	65,788	66,299	66,810	67,321	67,832	68,343	68,853	69,364	69,874
88	62,423	62,936	63,448	63,961	64,473	64,985	65,497	66,009	66,521	67,032	67,543	68,054	68,565	69,076	69,586
89	62,129	62,642	63,155	63,668	64,181	64,693	65,206	65,718	66,230	66,742	67,253	67,765	68,276	68,787	69,298
90	61,834	62,348	62,861	63,375	63,888	64,401	64,914	65,426	65,938	66,451	66,963	67,474	67,986	68,497	69,008
91	61,538	62,052	62,567	63,080	63,594	64,107	64,621	65,133	65,646	66,159	66,671	67,183	67,695	68,207	68,719
92	61,242	61,756	62,270	62,785	63,299	63,813	64,327	64,840	65,353	65,866	66,379	66,891	67,404	67,916	68,428
93	60,944	61,459	61,974	62,489	63,004	63,518	64,032	64,546	65,059	65,573	66,086	66,599	67,112	67,624	68,136
94	60,646	61,161	61,677	62,192	62,707	63,222	63,736	64,251	64,756	65,278	65,792	66,305	66,819	67,331	67,844
95	60,346	60,863	61,379	61,894	62,410	62,925	63,440	63,995	64,469	64,983	65,497	66,011	66,525	67,038	67,551
96	60,046	60,563	61,079	61,596	62,112	62,627	63,143	63,658	64,173	64,688	65,202	65,716	66,230	66,744	67,257
97	59,745	60,262	60,779	61,296	61,812	62,329	62,845	63,360	63,876	64,391	64,906	65,420	65,935	66,449	66,963
98	59,442	59,960	60,478	60,995	61,512	62,029	62,545	63,062	63,577	64,093	64,608	65,124	65,638	66,153	66,667
99	59,139	59,657	60,176	60,693	61,211	61,728	62,245	62,762	63,278	63,795	64,310	64,826	65,341	65,856	66,371
100	58,834	59,354	59,872	60,391	60,909	61,427	61,944	62,462	62,979	63,495	64,011	64,528	65,043	65,559	66,074
101	58,529	59,049	59,568	60,087	60,606	61,124	61,642	62,160	62,678	63,195	63,712	64,228	64,745	65,261	66,776
102	58,222	58,743	59,263	59,782	60,302	60,821	61,339	61,858	62,376	62,893	63,411	63,928	64,445	64,961	65,478
103	57,915	58,436	58,956	59,477	59,997	60,516	61,035	61,554	62,073	62,591	63,109	63,627	64,144	64,661	65,178
104	57,606	58,127	58,649	59,170	59,690	60,211	60,730	61,250	61,769	62,288	62,806	63,325	63,842	64,360	64,877
105	57,296	57,818	58,340	58,862	59,383	59,904	60,424	60,945	61,464	61,984	62,503	63,022	63,540	64,058	64,576
106	56,984	57,508	58,030	58,553	59,075	59,596	60,117	60,638	61,159	61,678	62,198	62,717	63,236	63,755	64,273
107	56,672	57,196	57,720	58,243	58,765	59,287	59,809	60,331	60,852	61,372	61,892	62,412	62,932	63,451	63,970
108	56,358	56,883	57,407	57,931	58,455	58,977	59,500	60,022	60,544	61,064	61,586	62,106	62,626	63,146	63,666
109	56,043	56,569	57,094	57,619	58,143	58,666	59,189	59,712	60,235	60,757	61,278	61,799	62,320	62,840	63,360
110	55,727	56,254	56,779	57,305	57,830	58,354	58,878	59,401	59,924	60,447	60,969	61,491	62,012	62,533	63,054
111	55,410	55,937	56,464	56,990	57,515	58,040	58,565	59,089	59,613	60,136	60,659	61,182	61,704	62,225	62,747
112	55,091	55,619	56,146	56,673	57,200	57,726	58,251	58,776	59,301	59,825	60,348	60,871	61,394	61,916	62,438
113	54,770	55,299	55,828	56,356	56,883	57,410	57,936	58,462	58,987	59,512	60,036	60,560	61,083	61,606	62,129
114	54,449	54,979	55,508	56,037	56,565	57,092	57,619	58,146	58,672	59,198	59,723	60,247	60,771	61,295	61,818
115	54,125	54,656	55,187	55,716	56,245	56,774	57,302	57,829	58,356	58,882	59,408	59,933	60,458	60,983	61,507
116	53,801	54,332	54,864	55,394	55,924	56,454	56,983	57,511	58,039	58,566	59,092	59,618	60,144	60,669	61,194
117	53,474	54,007	54,540	55,071	55,602	56,132	56,662	57,191	57,720	58,248	58,775	59,302	59,828	60,354	60,880
118	53,146	53,680	54,214	54,746	55,278	55,810	56,340	56,870	57,400	57,929	58,457	58,985	59,512	60,038	60,565
119	52,817	53,352	53,887	54,420	54,953	55,485	56,017	56,548	57,078	57,608	58,137	58,666	59,194	59,721	60,248
120	52,486	53,022	53,559	54,092	54,626	55,160	55,692	56,224	56,756	57,286	57,816	58,346	58,875	59,403	59,931

$z_2 - z_1$ \ $z_c - z_1$	187	188	189	190	191	192	193	194	195	196	197	198	199	200	201
61	77,643	78,147	78,650	79,154	79,658	80,162	80,666	81,169	81,673	82,176	82,680	83,183	83,687	84,190	84,693
62	77,370	77,874	78,378	78,882	79,386	79,890	80,394	80,898	81,402	81,905	82,409	82,913	83,416	83,920	84,423
63	77,098	77,602	78,106	78,610	79,114	79,618	80,122	80,626	81,130	81,634	82,138	82,641	83,145	83,649	84,152
64	76,824	77,329	77,833	78,337	78,842	79,346	79,850	80,354	80,858	81,362	81,866	82,370	82,874	83,377	83,881
65	76,550	77,055	77,560	78,064	78,568	79,073	79,577	80,081	80,585	81,090	81,594	82,098	82,602	83,106	83,610
66	76,276	76,781	77,285	77,790	78,295	78,799	79,304	79,808	80,313	80,817	81,321	81,825	82,329	82,834	83,338
67	76,001	76,506	77,011	77,516	78,021	78,525	79,030	79,535	80,039	80,544	81,048	81,552	82,057	82,561	83,065
68	75,726	76,231	76,736	77,241	77,746	78,251	78,756	79,260	79,765	80,270	80,774	81,279	81,783	82,288	82,792
69	75,450	75,955	76,460	76,966	77,471	77,976	78,481	78,986	79,491	79,995	80,500	81,005	81,510	82,014	82,519
70	75,173	75,679	76,184	76,690	77,195	77,700	78,206	78,711	79,216	79,721	80,226	80,731	81,235	81,740	82,245
71	74,896	75,402	75,908	76,413	76,919	77,424	77,930	78,435	78,940	79,445	79,951	80,456	80,961	81,465	81,970
72	74,619	75,125	75,631	76,136	76,642	77,148	77,653	78,159	78,664	79,170	79,675	80,180	80,685	81,190	81,695
73	74,341	74,847	75,353	75,859	76,365	76,871	77,377	77,882	78,388	78,893	79,399	79,904	80,410	80,915	81,420
74	74,062	74,568	75,075	75,581	76,087	76,593	77,099	77,605	78,111	78,617	79,122	79,628	80,133	80,639	81,144
75	73,783	74,289	74,796	75,302	75,809	76,315	76,821	77,327	77,833	78,339	78,845	79,351	79,857	80,362	80,868
76	73,503	74,010	74,517	75,023	75,530	76,036	76,543	77,049	77,555	78,061	78,568	79,074	79,579	80,085	80,591
77	73,222	73,730	74,237	74,744	75,250	75,757	76,264	76,770	77,277	77,783	78,289	78,796	79,302	79,808	80,314
78	72,942	73,449	73,956	74,463	74,970	75,477	75,984	76,491	76,998	77,504	78,011	78,517	79,023	79,530	80,036
79	72,660	73,167	73,675	74,182	74,690	75,197	75,704	76,211	76,718	77,225	77,731	78,238	78,745	79,251	79,757
80	72,378	72,885	73,393	73,901	74,408	74,916	75,423	75,930	76,438	76,945	77,452	77,958	78,465	78,972	79,478
81	72,095	72,603	73,111	73,619	74,127	74,634	75,142	75,649	76,157	76,664	77,171	77,678	78,185	78,692	79,199
82	71,811	72,320	72,828	73,336	73,844	74,352	74,860	75,368	75,875	76,383	76,890	77,398	77,905	78,412	78,919
83	71,527	72,036	72,544	73,053	73,561	74,069	74,577	75,085	75,593	76,101	76,609	77,116	77,624	78,131	78,638
84	71,242	71,751	72,260	72,769	73,277	73,786	74,294	74,803	75,311	75,819	76,327	76,834	77,342	77,850	78,357
85	70,957	71,466	71,975	72,484	72,993	73,502	74,011	74,519	75,027	75,536	76,044	76,552	77,060	77,568	78,075
86	70,671	71,180	71,690	72,199	72,708	73,217	73,726	74,235	74,744	75,252	75,761	76,269	76,777	77,285	77,793
87	70,384	70,894	71,404	71,913	72,423	72,932	73,441	73,950	74,459	74,968	75,477	75,985	76,494	77,002	77,510
88	70,097	70,607	71,117	71,627	72,137	72,646	73,156	73,665	74,174	74,683	75,192	75,701	76,210	76,718	77,227
89	69,808	70,319	70,829	71,340	71,850	72,360	72,869	73,379	73,889	74,398	74,907	75,416	75,925	76,434	76,943
90	69,519	70,030	70,541	71,052	71,562	72,072	72,582	73,092	73,602	74,112	74,621	75,131	75,640	76,149	76,658
91	69,230	69,741	70,252	70,763	71,274	74,784	72,295	72,805	73,315	73,825	74,335	74,845	75,354	75,864	76,373
92	68,940	69,451	69,963	70,474	70,985	71,496	72,007	72,517	73,028	73,538	74,048	74,558	75,068	75,578	76,087
93	68,648	69,160	69,672	70,184	70,695	71,206	71,718	72,228	72,739	73,250	73,760	74,271	74,781	75,291	75,801
94	68,357	68,869	69,381	69,893	70,405	70,916	71,428	71,939	72,450	72,961	73,472	73,983	74,493	75,003	75,514
95	68,064	68,577	68,089	69,602	70,114	70,626	71,138	71,649	72,161	72,672	73,183	73,694	74,205	74,715	75,226
96	67,771	68,284	68,797	69,309	69,822	70,334	70,846	71,358	71,870	72,382	72,893	73,404	73,916	74,427	74,937
97	67,477	67,990	68,503	69,017	69,529	70,042	70,555	71,067	71,579	72,091	72,603	73,114	73,626	74,137	74,648
98	67,182	67,696	68,209	68,723	69,236	69,749	70,262	70,775	71,287	71,800	72,312	72,824	73,335	73,847	74,359
99	66,886	67,400	67,914	68,428	68,942	69,455	69,969	70,482	70,995	71,507	72,020	72,532	73,044	73,556	74,068
100	66,589	67,104	67,619	68,133	68,647	69,161	69,675	70,188	70,701	71,214	71,727	72,240	72,753	73,265	73,777
101	66,292	66,807	67,322	67,837	68,351	68,866	69,380	69,894	70,407	70,921	71,434	71,947	72,460	72,973	73,485
102	65,993	66,509	67,025	67,540	68,055	68,570	69,084	69,598	70,113	70,626	71,140	71,653	72,167	72,680	73,193
103	65,694	66,211	66,726	67,242	67,758	68,273	68,788	69,302	69,817	70,331	70,845	71,359	71,873	72,386	72,899
104	65,394	65,911	66,427	66,944	67,459	67,975	68,490	69,006	69,521	70,035	70,550	71,064	71,578	72,092	72,605
105	65,093	65,610	66,127	66,644	67,160	67,677	68,192	68,708	69,223	69,738	70,253	70,768	71,282	71,797	72,311
106	64,791	65,309	65,827	66,344	66,861	67,377	67,893	68,410	68,925	69,441	69,956	70,471	70,986	71,501	72,015
107	64,489	65,007	65,525	66,042	66,560	67,077	67,594	68,110	68,626	69,142	69,658	70,174	70,689	71,204	71,719
108	64,185	64,704	65,222	65,740	66,258	66,776	67,293	67,810	68,327	68,843	69,359	69,875	70,391	70,907	71,422
109	63,880	64,399	64,918	65,437	65,956	66,474	66,991	67,509	68,026	68,543	69,060	69,576	70,092	70,608	71,124
110	63,574	64,094	64,614	65,133	65,652	66,171	66,689	67,207	67,725	68,242	68,759	69,276	69,793	70,309	70,825
111	63,268	63,788	64,308	64,828	65,348	65,867	66,386	66,904	67,422	67,940	68,458	68,975	69,493	70,009	70,526
112	62,960	63,481	64,002	64,522	65,042	65,562	66,081	66,600	67,119	67,638	68,156	68,674	69,191	69,709	70,226
113	62,651	63,173	63,694	64,215	64,736	65,256	65,776	66,296	66,815	67,334	67,853	68,371	68,889	69,407	69,925
114	62,341	62,863	63,385	63,907	64,428	64,949	65,470	65,990	66,510	67,030	67,549	68,068	68,586	69,105	69,623
115	62,030	62,553	63,076	63,598	64,120	64,642	65,163	65,683	66,204	66,724	67,244	67,763	68,282	68,801	69,320
116	61,718	62,242	62,765	63,288	63,811	64,333	64,854	65,376	65,897	66,418	66,938	67,458	67,978	68,497	69,016
117	61,405	61,929	62,453	62,977	63,500	64,023	64,545	65,067	65,589	66,110	66,631	67,152	67,672	68,192	68,711
118	61,090	61,616	62,140	62,665	63,188	63,714	64,235	64,758	65,280	65,802	66,323	66,844	67,365	67,886	68,406
119	60,775	61,301	61,826	62,351	62,876	63,400	63,924	64,447	64,970	65,492	66,014	66,536	67,058	67,579	68,099
120	60,458	60,985	61,511	62,037	62,562	63,087	63,611	64,135	64,659	65,182	65,705	66,227	66,749	67,271	67,792

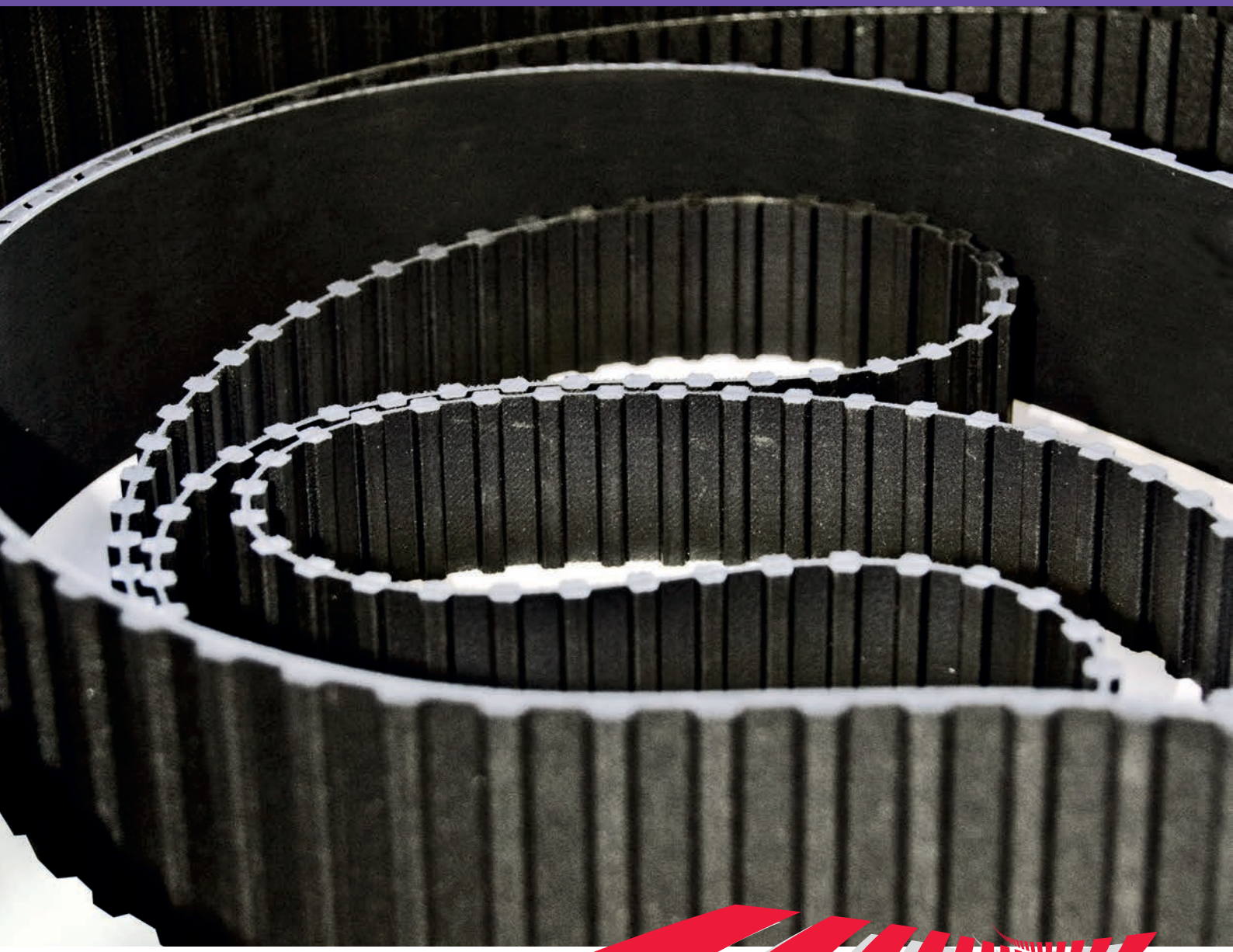

ISORAN AND ISORAN DD

Megadyne Isoran and Isoran DD belts are a class of belt very widely used in several kind of applications. These belts are made in polychloroprene compound. Special compounds with different features are available on request. Here under some belt's characteristics.

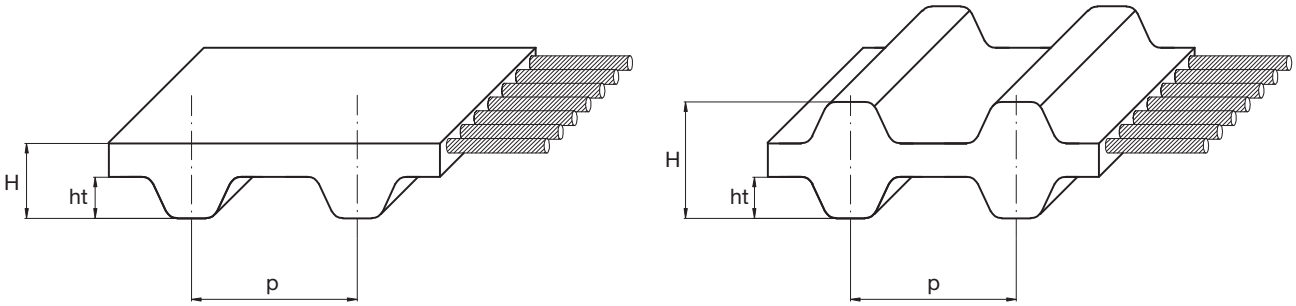

Pitch		MXL	XL	L	H	XH	XXH	XLDD	LDD	HDD
Pitch length (mm)	p	2,032	5,080	9,525	12,700	22,225	31,750	5,080	9,525	12,700
Teeth height (mm)	ht	0,51	1,27	1,91	2,29	6,35	9,53	1,27	1,91	2,29
Belt height (mm)	H	1,14	2,40	3,60	4,40	11,40	15,30	3,05	4,60	5,90

Resistance to:	Standard belt resistance
Water	Medium
Acids / Alkalis	None
Solvents	None
Mineral oils	Low
Oils	Low
Greases	Medium
Fuels	None
Environmental agents	Medium

Other features	
Temperature range	Min: -25 °C
	Max: 80 °C
	Max peak: 100 °C
Hardness	74 +/- 4 ShA

STANDARD TOLERANCES

Width tolerances

Belt width (inches)		Belt width (mm)		Tolerance on belt width		
				Belt length (inches)		
More than	Up to	More than	Up to	Up to 33"	More than 33" up to 66"	More than 66"
-	044	-	11,1	+0,4 -0,8	+0,4 -0,8	-
044	150	11,1	38,1	±0,8	+0,8 -1,2	+0,8 -1,2
150	200	38,1	50,8	+0,8 -1,2	±1,2	+1,2 -1,6
200	300	50,8	76,2	+1,2 -1,6	±1,6	+1,6 -2,0
300	400	76,2	101,6	-	+1,3 -1,5	+1,3 -1,5
400	500	101,6	127,0	-	+1,3 -1,5	+1,3 -1,5

Length tolerances

Belt length (mm)		Tolerance (mm)	Belt length (mm)		Tolerance (mm)
More than	Up to		More than	Up to	
-	254	±0,40	2.286	2.540	±1,00
254	381	±0,45	2.540	2.794	±1,05
381	508	±0,50	2.794	3.048	±1,10
508	762	±0,60	3.048	3.302	±1,15
762	991	±0,65	3.302	3.556	±1,20
991	1.220	±0,75	3.556	3.810	±1,25
1.220	1.524	±0,80	3.810	4.064	±1,30
1.524	1.778	±0,85	4.064	4.318	±1,35
1.778	2.032	±0,90	4.318	4.572	±1,40
2.032	2.286	±0,95	-	-	-

Thickness tolerances

Pitch	Nominal belt tickness (mm)	Tolerance degree (mm)		
		Standard belt	Grade 2	Grade 1
MXL	1,14	±0,25	±0,15	±0,15
XL	2,40	±0,25	±0,15	±0,15
L	3,60	±0,25	±0,25	±0,15
H	4,40	±0,60	±0,25	±0,15
XH	11,40	±0,60	±0,25	-
XXH	15,30	±0,60	±0,25	-

For specific application where you might require different tolerances, please contact our Application Department.

STANDARD WIDTHS

	Belt widths												
Pitch	012	019	025	031	037	050	075	100	150	200	300	400	500
	3,05	4,83	6,35	7,87	9,40	12,70	19,05	25,40	38,10	50,80	76,20	101,60	127,00
MXL	•	•	•										
XL - XL DD			•	•	•								
L - L DD						•	•	•					
H - H DD							•	•	•	•	•		
XH										•	•	•	
XXH										•	•	•	•

RANGE

MXL	
Code	Pitch length (mm)
360 MXL	91,44
432 MXL	109,73
440 MXL	111,76
456 MXL	115,82
480 MXL	121,92
488 MXL	123,95
496 MXL	125,98
536 MXL	136,14
544 MXL	138,18
576 MXL	146,30
584 MXL	148,34
608 MXL	154,43
632 MXL	160,53
640 MXL	162,56
656 MXL	166,62
664 MXL	168,66
680 MXL	172,72
704 MXL	178,82
720 MXL	182,88
736 MXL	186,94
752 MXL	191,00
760 MXL	193,04
776 MXL	197,10
800 MXL	203,20
808 MXL	205,23
824 MXL	209,30
840 MXL	213,36
880 MXL	223,52
888 MXL	225,55
912 MXL	231,65
920 MXL	233,68
944 MXL	239,78
952 MXL	241,81
960 MXL	243,84
976 MXL	247,90
984 MXL	249,94
1000 MXL	254,00
1008 MXL	256,03
1016 MXL	258,06
1040 MXL	264,16
1056 MXL	268,22
1072 MXL	272,29
1120 MXL	284,48
1160 MXL	294,64
1176 MXL	298,70
1184 MXL	300,74
1200 MXL	304,80
1224 MXL	310,90
1240 MXL	314,96
1280 MXL	325,12
1400 MXL	355,60
1472 MXL	373,89
1496 MXL	379,98
1520 MXL	386,08
1600 MXL	406,40
1680 MXL	426,72
1696 MXL	430,78
1768 MXL	449,07
1800 MXL	457,20
1832 MXL	465,33
1856 MXL	471,42
1888 MXL	479,55
1984 MXL	503,94
1992 MXL	505,97
2048 MXL	520,19
2240 MXL	568,96
2360 MXL	599,44
2384 MXL	605,54
2480 MXL	629,92
2496 MXL	633,98
2520 MXL	640,08
2584 MXL	656,34
2776 MXL	705,10
2864 MXL	727,46
2880 MXL	731,52
2976 MXL	755,90
3064 MXL	778,26
3104 MXL	788,42
3200 MXL	812,80
3296 MXL	837,18
3424 MXL	869,70
3472 MXL	881,89
3480 MXL	883,92
3520 MXL	894,08
3632 MXL	922,53
3704 MXL	940,82
3944 MXL	1001,78
4000 MXL	1016,00

MXL	
Code	Pitch length (mm)
4064 MXL	1032,26
4200 MXL	1066,80
4280 MXL	1087,12
4320 MXL	1097,28
4456 MXL	1131,82
4736 MXL	1202,94
4800 MXL	1219,20
5224 MXL	1326,90
Standard widths	
012	3,05
019	4,83
025	6,35

XL	
Code	Pitch length (mm)
54 XL	137,16
60 XL	152,40
70 XL	177,80
80 XL	203,20
90 XL	228,60
98 XL	248,92
100 XL	254,00
102 XL	259,08
104 XL	264,16
106 XL	269,24
110 XL	279,40
120 XL	304,80
130 XL	330,20
140 XL	355,60
146 XL	370,84
150 XL	381,00
156 XL	396,24
160 XL	406,40
170 XL	431,80
176 XL	447,04
180 XL	457,20
182 XL	462,28
188 XL	477,52
190 XL	482,60
198 XL	502,92
200 XL	508,00
202 XL	513,08
210 XL	533,40
212 XL	538,48
214 XL	543,56
220 XL	558,80
228 XL	579,12
230 XL	584,20
234 XL	594,36
240 XL	609,60
250 XL	635,00
260 XL	660,40
270 XL	685,80
276 XL	701,04
290 XL	736,60
310 XL	787,40
316 XL	802,64
320 XL	812,80
330 XL	838,20
344 XL	873,76
352 XL	894,08
364 XL	924,56
380 XL	965,20
384 XL	975,36
388 XL	985,52
390 XL	990,60
392 XL	995,68
434 XL	1102,36
460 XL	1168,40
530 XL	1346,20
600 XL	1524,00
710 XL	1803,40
Standard widths	
025	6,35
031	7,87
037	9,40

L	
Code	Pitch length (mm)
124 L	314,32
135 L	342,90
150 L	381,00
173 L	438,15
187 L	476,25
202 L	514,35
210 L	533,40
225 L	571,50
240 L	609,60
255 L	647,70
270 L	685,80
285 L	723,90
300 L	762,00
322 L	819,15
334 L	848,36
345 L	876,30
367 L	933,45
390 L	990,60
405 L	1028,70
412 L	1047,75
420 L	1066,80
450 L	1143,00
480 L	1219,20
510 L	1295,40
540 L	1371,60
600 L	1524,00
728 L	1847,85
817 L	2076,45
Standard widths	
050	12,70
075	19,05
100	25,40

H	
Code	Pitch length (mm)
240 H	609,60
270 H	685,80
300 H	762,00
330 H	838,20
360 H	914,40
390 H	990,60
420 H	1066,80
450 H	1143,00
480 H	1219,20
510 H	1295,40
540 H	1371,60
570 H	1447,80
600 H	1524,00
630 H	1600,20
660 H	1676,40
670 H	1701,80
700 H	1778,00
725 H	1841,50
750 H	1905,00
800 H	2032,00
850 H	2159,00
900 H	2286,00
1000 H	2540,00
1100 H	2794,00
1120 H	2844,80
1140 H	2895,60
1150 H	2921,00
1250 H	3175,00
1400 H	3556,00
1645 H	4178,30
1700 H	4318,00
Standard widths	
075	19,05
100	25,40
150	38,10
200	50,80
300	76,20

XH	
Code	Pitch length (mm)
507 XH	1289,00
534 XH	1355,72
560 XH	1422,40
630 XH	1600,20
700 XH	1778,00
770 XH	1955,80
840 XH	2133,60
980 XH	2489,20
1120 XH	2844,80
1260 XH	3200,40
1400 XH	3556,00
1540 XH	3911,60
1750 XH	4445,00
Standard widths	
200	50,80
300	76,20
400	101,60

XXH	
Code	Pitch length (mm)
700 XXH	1778,00
800 XXH	2032,00
900 XXH	2286,00
1000 XXH	2540,00
1200 XXH	3048,00
1400 XXH	3556,00
1600 XXH	4064,00
1800 XXH	4572,00
Standard widths	
200	50,80
300	76,20
400	101,60
500	127,00

XL DD	
Code	Pitch length (mm)
120 XL DD	304,80
130 XL DD	330,20
140 XL DD	355,60
146 XL DD	370,84
150 XL DD	381,00
156 XL DD	396,24
160 XL DD	406,40
170 XL DD	431,80
176 XL DD	447,04
180 XL DD	457,20
182 XL DD	462,28
188 XL DD	477,52
190 XL DD	482,60
198 XL DD	502,92
200 XL DD	508,00
202 XL DD	513,08
210 XL DD	533,40
212 XL DD	538,48
214 XL DD	543,56
220 XL DD	558,80
228 XL DD	579,12
230 XL DD	584,20
234 XL DD	594,36
240 XL DD	609,60
250 XL DD	635,00
260 XL DD	660,40
270 XL DD	685,80
276 XL DD	701,04
290 XL DD	736,60
310 XL DD	787,40
316 XL DD	802,64
320 XL DD	812,80
330 XL DD	838,20
344 XL DD	873,76
352 XL DD	894,08
364 XL DD	924,56
380 XL DD	965,20
384 XL DD	975,36
388 XL DD	985,52
390 XL DD	990,60
392 XL DD	995,68
434 XL DD	1102,36
460 XL DD	1168,40
530 XL DD	1346,20
600 XL DD	1524,00
710 XL DD	1803,40
Standard widths	
025	6,35
031	7,87
037	9,40

L DD	
Code	Pitch length (mm)
124 L DD	314,32
135 L DD	342,90
150 L DD	381,00
173 L DD	438,15
187 L DD	476,25
202 L DD	514,35
210 L DD	533,40
225 L DD	571,50
240 L DD	609,60
255 L DD	647,70
270 L DD	685,80
285 L DD	723,90
300 L DD	762,00
322 L DD	819,15
334 L DD	848,36
345 L DD	876,30
367 L DD	933,45
390 L DD	990,60
405 L DD	1028,70
412 L DD	1047,75
420 L DD	1066,80
450 L DD	1143,00
480 L DD	1219,20
510 L DD	1295,40
540 L DD	1371,60
600 L DD	1524,00
728 L DD	1847,85
817 L DD	2076,45
Standard widths	
050	12,70
075	19,05
100	25,40

H DD	
Code	Pitch length (mm)
240 H DD	609,60
270 H DD	685,80
300 H DD	762,00
330 H DD	838,20
360 H DD	914,40
390 H DD	990,60
420 H DD	1066,80
450 H DD	1143,00
480 H DD	1219,20
510 H DD	1295,40
540 H DD	1371,60
570 H DD	1447,80
600 H DD	1524,00
630 H DD	1600,20
660 H DD	1676,40
670 H DD	1701,80
700 H DD	1778,00
725 H DD	1841,50
750 H DD	1905,00
800 H DD	2032,00
850 H DD	2159,00
900 H DD	2286,00
1000 H DD	2540,00
1100 H DD	2794,00
1120 H DD	2844,80
1140 H DD	2895,60
1150 H DD	2921,00
1250 H DD	3175,00
1400 H DD	3556,00
1645 H DD	4178,30
1700 H DD	4318,00
Standard widths	
075	19,05
100	25,40
150	38,10
200	50,80
300	76,20

BASIC PERFORMANCE Pb IN W FOR ISORAN MXL - 25 mm WIDE (W / 25 mm)														
d (mm)	6,47	7,11	7,76	9,06	9,70	10,35	11,64	12,94	13,58	14,23	15,52	18,11	19,40	20,70
z	10	11	12	14	15	16	18	20	21	22	24	28	30	32
rpm														
100	3	3	3	4	4	4	5	6	6	6	7	8	8	9
200	6	6	7	8	8	9	10	11	12	12	13	15	17	18
300	8	9	10	12	12	13	15	17	17	18	20	23	25	26
400	11	12	13	15	17	18	20	22	23	24	26	31	33	35
500	14	15	17	19	21	22	25	28	29	30	33	39	41	44
600	17	18	20	23	25	26	30	33	35	36	40	46	50	53
725	20	22	24	28	30	32	36	40	42	44	48	56	60	64
800	22	24	26	31	33	35	40	44	46	48	53	62	66	71
900	25	27	30	35	37	40	45	50	52	55	60	69	74	79
950	26	29	31	37	39	42	47	52	55	58	63	73	79	84
1000	28	30	33	39	41	44	50	55	58	61	66	77	83	88
1100	30	33	36	42	45	48	55	61	64	67	73	85	91	97
1200	33	36	40	46	50	53	60	66	69	73	79	93	99	106
1300	36	39	43	50	54	57	64	72	75	79	86	100	107	115
1400	39	42	46	54	58	62	69	77	81	85	93	108	116	123
1425	39	43	47	55	59	63	71	79	82	86	94	110	118	126
1500	41	45	50	58	62	66	74	83	87	91	99	116	124	132
1600	44	48	53	62	66	71	79	88	93	97	106	123	132	141
1700	47	52	56	66	70	75	84	94	98	103	112	131	140	150
1800	50	55	60	69	74	79	89	99	104	109	119	139	149	158
1900	52	58	63	73	79	84	94	105	110	115	126	146	157	167
2000	55	61	66	77	83	88	99	110	116	121	132	154	165	176
2200	61	67	73	85	91	97	109	121	127	133	145	169	182	194
2400	66	73	79	93	99	106	119	132	139	145	158	185	198	211
2600	72	79	86	100	107	115	129	143	150	157	172	200	214	229
2800	77	85	93	108	116	123	139	154	162	169	185	215	231	246
2850	79	86	94	110	118	126	141	157	165	172	188	219	235	250
3000	83	91	99	116	124	132	149	165	173	182	198	231	247	263
3200	88	97	106	123	132	141	158	176	185	194	211	246	263	281
3400	94	103	112	131	140	150	168	187	196	206	224	261	280	298
3600	99	109	119	139	149	158	178	198	208	218	237	276	296	315
3800	105	115	126	146	157	167	188	209	219	230	250	292	312	333
4000	110	121	132	154	165	176	198	220	231	242	263	307	328	350
4200	116	127	139	162	173	185	208	231	242	254	276	322	345	367
4400	121	133	145	169	182	194	218	242	254	266	289	337	361	384
4600	127	139	152	177	190	202	227	253	265	278	302	352	377	402
4800	132	145	158	185	198	211	237	263	276	289	315	367	393	419
5000	138	151	165	192	206	220	247	274	288	301	328	382	409	436
5200	143	157	172	200	214	229	257	285	299	313	341	397	425	453
5400	149	163	178	208	223	237	267	296	311	325	354	412	441	470
5600	154	169	185	215	231	246	276	307	322	337	367	427	457	486
5800	160	175	191	223	239	255	286	318	333	349	380	442	473	503
6000	165	182	198	231	247	263	296	328	345	361	393	457	488	520
6500	179	197	214	250	267	285	320	355	373	390	425	494	528	562
7000	192	212	231	269	288	307	345	382	401	420	457	530	567	603
7500	206	227	247	288	308	328	369	409	429	449	488	567	605	643
8000	220	242	263	307	328	350	393	436	457	478	520	603	643	684
8500	233	257	280	326	349	372	417	462	485	507	551	638	681	724
9000	247	272	296	345	369	393	441	488	512	536	582	674	719	763
9500	261	286	312	363	389	414	465	515	539	564	613	709	755	801
10000	274	301	328	382	409	436	488	541	567	592	643	743	792	839
10500	288	316	345	401	429	457	512	567	594	621	674	777	828	877
11000	301	331	361	420	449	478	536	592	621	649	704	811	863	914
11500	315	346	377	438	469	499	559	618	647	676	733	844	898	950
12000	328	361	393	457	488	520	582	643	674	704	763	877	932	985
12500	342	376	409	475	508	541	605	669	700	731	792	909	965	1020
13000	355	390	425	494	528	562	628	694	726	758	821	941	998	1053
13500	369	405	441	512	547	582	651	719	752	785	849	972	1030	1086
14000	382	420	457	530	567	603	674	743	777	811	877	1002	1062	1118
14500	396	434	473	549	586	623	696	768	803	837	905	1032	1092	1150
15000	409	449	488	567	605	643	719	792	828	863	932	1062	1122	1180
16000	436	478	520	603	643	684	763	839	877	914	985	1118	1180	1238
17000	462	507	551	638	681	724	806	886	925	963	1037	1172	1234	1291
18000	488	536	582	674	719	763	849	932	972	1011	1086	1223	1285	1340
19000	515	564	613	709	755	801	891	976	1017	1058	1134	1272	1331	1385
20000	541	592	643	743	792	839	932	1020	1062	1102	1180	1316	1374	1425

BASIC PERFORMANCE Pb IN kW FOR ISORAN XL AND XL DD - 25 mm WIDE (kW / 25 mm)														
d (mm)	16,17	17,79	19,40	22,64	24,26	25,87	29,11	32,34	33,96	35,57	38,81	45,28	48,51	51,74
z	10	11	12	14	15	16	18	20	21	22	24	28	30	32
rpm														
100	0,02	0,02	0,02	0,02	0,02	0,02	0,03	0,03	0,03	0,03	0,04	0,04	0,05	0,05
200	0,03	0,03	0,04	0,04	0,05	0,05	0,05	0,06	0,06	0,07	0,07	0,09	0,09	0,10
300	0,05	0,05	0,05	0,06	0,07	0,07	0,08	0,09	0,10	0,10	0,11	0,13	0,14	0,15
400	0,06	0,07	0,07	0,09	0,09	0,10	0,11	0,12	0,13	0,13	0,15	0,17	0,18	0,19
500	0,08	0,08	0,09	0,11	0,11	0,12	0,14	0,15	0,16	0,17	0,18	0,21	0,23	0,24
600	0,09	0,10	0,11	0,13	0,14	0,15	0,16	0,18	0,19	0,20	0,22	0,26	0,27	0,29
725	0,11	0,12	0,13	0,15	0,17	0,18	0,20	0,22	0,23	0,24	0,26	0,31	0,33	0,35
800	0,12	0,13	0,15	0,17	0,18	0,19	0,22	0,24	0,26	0,27	0,29	0,34	0,36	0,39
900	0,14	0,15	0,16	0,19	0,21	0,22	0,25	0,27	0,29	0,30	0,33	0,38	0,41	0,44
950	0,14	0,16	0,17	0,20	0,22	0,23	0,26	0,29	0,30	0,32	0,35	0,40	0,43	0,46
1000	0,15	0,17	0,18	0,21	0,23	0,24	0,27	0,30	0,32	0,33	0,36	0,43	0,46	0,49
1100	0,17	0,18	0,20	0,23	0,25	0,27	0,30	0,33	0,35	0,37	0,40	0,47	0,50	0,53
1200	0,18	0,20	0,22	0,26	0,27	0,29	0,33	0,36	0,38	0,40	0,44	0,51	0,55	0,58
1300	0,20	0,22	0,24	0,28	0,30	0,32	0,36	0,39	0,41	0,43	0,47	0,55	0,59	0,63
1400	0,21	0,23	0,26	0,30	0,32	0,34	0,38	0,43	0,45	0,47	0,51	0,59	0,64	0,68
1425	0,22	0,24	0,26	0,30	0,32	0,35	0,39	0,43	0,45	0,48	0,52	0,60	0,65	0,69
1500	0,23	0,25	0,27	0,32	0,34	0,36	0,41	0,46	0,48	0,50	0,55	0,64	0,68	0,73
1600	0,24	0,27	0,29	0,34	0,36	0,39	0,44	0,49	0,51	0,53	0,58	0,68	0,73	0,77
1700	0,26	0,28	0,31	0,36	0,39	0,41	0,46	0,52	0,54	0,57	0,62	0,72	0,77	0,82
1800	0,27	0,30	0,33	0,38	0,41	0,44	0,49	0,55	0,57	0,60	0,65	0,76	0,82	0,87
1900	0,29	0,32	0,35	0,40	0,43	0,46	0,52	0,58	0,60	0,63	0,69	0,80	0,86	0,92
2000	0,30	0,33	0,36	0,43	0,46	0,49	0,55	0,61	0,64	0,67	0,73	0,84	0,90	0,96
2200	0,33	0,37	0,40	0,47	0,50	0,53	0,60	0,67	0,70	0,73	0,80	0,93	0,99	1,06
2400	0,36	0,40	0,44	0,51	0,55	0,58	0,65	0,73	0,76	0,80	0,87	1,01	1,08	1,15
2600	0,39	0,43	0,47	0,55	0,59	0,63	0,71	0,79	0,82	0,86	0,94	1,09	1,17	1,24
2800	0,43	0,47	0,51	0,59	0,64	0,68	0,76	0,84	0,89	0,93	1,01	1,17	1,25	1,33
2850	0,43	0,48	0,52	0,60	0,65	0,69	0,78	0,86	0,90	0,94	1,03	1,19	1,28	1,36
3000	0,46	0,50	0,55	0,64	0,68	0,73	0,82	0,90	0,95	0,99	1,08	1,25	1,34	1,42
3200	0,49	0,53	0,58	0,68	0,73	0,77	0,87	0,96	1,01	1,06	1,15	1,33	1,42	1,51
3400	0,52	0,57	0,62	0,72	0,77	0,82	0,92	1,02	1,07	1,12	1,22	1,41	1,51	1,60
3600	0,55	0,60	0,65	0,76	0,82	0,87	0,97	1,08	1,13	1,18	1,29	1,49	1,59	1,69
3800	0,58	0,63	0,69	0,80	0,86	0,92	1,03	1,14	1,19	1,25	1,36	1,57	1,67	1,78
4000	0,61	0,67	0,73	0,84	0,90	0,96	1,08	1,20	1,25	1,31	1,42	1,65	1,76	1,86
4200	0,64	0,70	0,76	0,89	0,95	1,01	1,13	1,25	1,31	1,37	1,49	1,72	1,84	1,95
4400	0,67	0,73	0,80	0,93	0,99	1,06	1,18	1,31	1,37	1,44	1,56	1,80	1,91	2,03
4600	0,70	0,76	0,83	0,97	1,04	1,10	1,24	1,37	1,43	1,50	1,63	1,87	1,99	2,11
4800	0,73	0,80	0,87	1,01	1,08	1,15	1,29	1,42	1,49	1,56	1,69	1,95	2,07	2,19
5000	0,76	0,83	0,90	1,05	1,12	1,20	1,34	1,48	1,55	1,62	1,76	2,02	2,15	2,27
5200	0,79	0,86	0,94	1,09	1,17	1,24	1,39	1,54	1,61	1,68	1,82	2,09	2,22	2,34
5400	0,82	0,90	0,97	1,13	1,21	1,29	1,44	1,59	1,67	1,74	1,88	2,16	2,29	2,42
5600					1,25	1,33	1,49	1,65	1,72	1,80	1,95	2,23	2,36	2,49
5800					1,30	1,38	1,54	1,70	1,78	1,86	2,01	2,30	2,43	2,56
6000					1,34	1,42	1,59	1,76	1,84	1,91	2,07	2,36	2,50	2,63
6500					1,45	1,54	1,72	1,89	1,97	2,06	2,22	2,52	2,67	2,80
7000					1,55	1,65	1,84	2,02	2,11	2,19	2,36	2,68	2,82	2,95
7500							1,95	2,15	2,24	2,33	2,50	2,82	2,96	3,09
8000							2,07	2,27	2,36	2,46	2,63	2,95	3,09	3,21
8500							2,18	2,39	2,48	2,58	2,76	3,07	3,21	3,32
9000							2,29	2,50	2,60	2,70	2,88	3,18	3,31	3,41
9500							2,40	2,61	2,71	2,81	2,99	3,28	3,40	3,48
10000							2,50	2,72	2,82	2,91	3,09	3,37	3,47	3,54
10500							2,60	2,82	2,92	3,01	3,18	3,44	3,52	3,57
11000							2,70	2,91	3,01	3,11	3,27	3,50	3,56	3,58
11500							2,79	3,01	3,10	3,19	3,35	3,54	3,58	3,57
12000							2,88	3,09	3,18	3,27	3,41	3,57	3,58	3,54
12500							2,96	3,17	3,26	3,34	3,47	3,58	3,56	3,49
13000							3,04	3,24	3,33	3,40	3,51	3,58	3,52	3,41
13500							3,11	3,31	3,39	3,45	3,55	3,56	3,46	3,30
14000							3,18	3,37	3,44	3,50	3,57	3,52	3,38	3,16
14500							3,25	3,42	3,49	3,54	3,58	3,46	3,28	3,00
15000							3,31	3,47	3,52	3,56	3,58	3,38	3,15	2,81

Yellow area: at these conditions life's reduction is expected.
Light blue area: at these conditions linear speed exceeds 30 m/s, we suggest to use special pulleys.
Green area: both of the above conditions exist.

L - L DD

BASIC PERFORMANCE Pb IN kW FOR ISORAN L AND L DD - 25 mm WIDE (kW / 25 mm)															
d (mm)	30,32	36,38	42,45	48,51	54,57	60,64	66,70	72,77	78,83	84,89	90,96	97,02	109,15	121,28	145,53
z	10	12	14	16	18	20	22	24	26	28	30	32	36	40	48
rpm															
100	0,04	0,05	0,05	0,06	0,07	0,08	0,08	0,09	0,10	0,11	0,11	0,12	0,14	0,15	0,18
200	0,08	0,09	0,11	0,12	0,14	0,15	0,17	0,18	0,20	0,21	0,23	0,24	0,28	0,31	0,37
300	0,11	0,14	0,16	0,18	0,21	0,23	0,25	0,28	0,30	0,32	0,34	0,37	0,41	0,46	0,55
400	0,15	0,18	0,21	0,24	0,28	0,31	0,34	0,37	0,40	0,43	0,46	0,49	0,55	0,61	0,73
500	0,19	0,23	0,27	0,31	0,34	0,38	0,42	0,46	0,50	0,53	0,57	0,61	0,69	0,76	0,91
600	0,23	0,28	0,32	0,37	0,41	0,46	0,50	0,55	0,60	0,64	0,69	0,73	0,82	0,91	1,09
700	0,27	0,32	0,37	0,43	0,48	0,53	0,59	0,64	0,69	0,75	0,80	0,85	0,96	1,06	1,27
725	0,28	0,33	0,39	0,44	0,50	0,55	0,61	0,66	0,72	0,77	0,83	0,88	0,99	1,10	1,32
800	0,31	0,37	0,43	0,49	0,55	0,61	0,67	0,73	0,79	0,85	0,91	0,97	1,09	1,21	1,45
900	0,34	0,41	0,48	0,55	0,62	0,69	0,76	0,82	0,89	0,96	1,03	1,09	1,23	1,36	1,62
950	0,36	0,44	0,51	0,58	0,65	0,72	0,80	0,87	0,94	1,01	1,08	1,15	1,29	1,43	1,71
1000	0,38	0,46	0,53	0,61	0,69	0,76	0,84	0,91	0,99	1,06	1,14	1,21	1,36	1,51	1,80
1100	0,42	0,50	0,59	0,67	0,76	0,84	0,92	1,00	1,09	1,17	1,25	1,33	1,49	1,65	1,97
1200	0,46	0,55	0,64	0,73	0,82	0,91	1,00	1,09	1,18	1,27	1,36	1,45	1,62	1,80	2,13
1300	0,50	0,60	0,69	0,79	0,89	0,99	1,09	1,18	1,28	1,38	1,47	1,57	1,75	1,94	2,30
1400	0,53	0,64	0,75	0,85	0,96	1,06	1,17	1,27	1,38	1,48	1,58	1,68	1,88	2,08	2,46
1425	0,54	0,65	0,76	0,87	0,98	1,08	1,19	1,29	1,40	1,50	1,61	1,71	1,91	2,11	2,50
1500	0,57	0,69	0,80	0,91	1,03	1,14	1,25	1,36	1,47	1,58	1,69	1,80	2,01	2,22	2,62
1600	0,61	0,73	0,85	0,97	1,09	1,21	1,33	1,45	1,57	1,68	1,80	1,91	2,13	2,35	2,77
1700	0,65	0,78	0,91	1,03	1,16	1,29	1,41	1,54	1,66	1,78	1,90	2,02	2,26	2,48	2,92
1800	0,69	0,82	0,96	1,09	1,23	1,36	1,49	1,62	1,75	1,88	2,01	2,13	2,38	2,62	3,06
1900	0,72	0,87	1,01	1,15	1,29	1,43	1,57	1,71	1,85	1,98	2,11	2,24	2,50	2,74	3,21
2000	0,76	0,91	1,06	1,21	1,36	1,51	1,65	1,80	1,94	2,08	2,22	2,35	2,62	2,87	3,34
2200	0,84	1,00	1,17	1,33	1,49	1,65	1,81	1,97	2,12	2,27	2,42	2,56	2,84	3,11	3,60
2400	0,91	1,09	1,27	1,45	1,62	1,80	1,97	2,13	2,30	2,46	2,62	2,77	3,06	3,34	3,83
2600	0,99	1,18	1,38	1,57	1,75	1,94	2,12	2,30	2,47	2,64	2,81	2,97	3,27	3,56	4,04
2800	1,06	1,27	1,48	1,68	1,88	2,08	2,27	2,46	2,64	2,82	2,99	3,16	3,47	3,76	4,23
2850	1,08	1,29	1,50	1,71	1,91	2,11	2,31	2,50	2,68	2,86	3,04	3,21	3,52	3,81	4,27
3000	1,14	1,36	1,58	1,80	2,01	2,22	2,42	2,62	2,81	2,99	3,17	3,34	3,66	3,94	4,39
3200	1,21	1,45	1,68	1,91	2,13	2,35	2,56	2,77	2,97	3,16	3,34	3,52	3,83	4,11	4,51
3400	1,29	1,54	1,78	2,02	2,26	2,48	2,71	2,92	3,12	3,32	3,50	3,68	3,99	4,26	4,61
3600	1,36	1,62	1,88	2,13	2,38	2,62	2,84	3,06	3,27	3,47	3,66	3,83	4,14	4,39	4,67
3800	1,43	1,71	1,98	2,24	2,50	2,74	2,98	3,21	3,42	3,62	3,81	3,98	4,27	4,50	4,70
4000	1,51	1,80	2,08	2,35	2,62	2,87	3,11	3,34	3,56	3,76	3,94	4,11	4,39	4,58	4,68
4200	1,58	1,88	2,17	2,46	2,73	2,99	3,24	3,47	3,69	3,89	4,07	4,23	4,49	4,64	4,63
4400	1,65	1,97	2,27	2,56	2,84	3,11	3,36	3,60	3,81	4,01	4,19	4,34	4,57	4,68	4,53
4600	1,72	2,05	2,36	2,67	2,96	3,23	3,48	3,72	3,93	4,13	4,29	4,43	4,63	4,70	4,40
4800	1,80	2,13	2,46	2,77	3,06	3,34	3,60	3,83	4,04	4,23	4,39	4,51	4,67	4,68	4,21
5000	1,87	2,22	2,55	2,87	3,17	3,45	3,71	3,94	4,15	4,33	4,47	4,58	4,69	4,64	3,98
5200	1,94	2,30	2,64	2,97	3,27	3,56	3,81	4,04	4,24	4,41	4,54	4,63	4,69	4,57	3,69
5400	2,01	2,38	2,73	3,06	3,37	3,66	3,92	4,14	4,33	4,49	4,60	4,67	4,67	4,47	3,36
5600	2,08	2,46	2,82	3,16	3,47	3,76	4,01	4,23	4,41	4,55	4,64	4,69	4,63	4,34	2,97
5800	2,15	2,54	2,91	3,25	3,57	3,85	4,10	4,31	4,48	4,60	4,68	4,70	4,56	4,18	2,53
6000	2,20	2,62	2,99	3,34	3,66	3,94	4,19	4,39	4,54	4,64	4,69	4,68	4,47	3,98	2,02
6200	2,28	2,69	3,08	3,43	3,75	4,03	4,27	4,45	4,59	4,67	4,70	4,65	4,35	3,75	
6400	2,35	2,77	3,16	3,52	3,83	4,11	4,34	4,51	4,63	4,69	4,68	4,60	4,21	3,48	
6600	2,42	2,84	3,24	3,60	3,92	4,19	4,40	4,57	4,66	4,70	4,65	4,53	4,04	3,17	
6800	2,48	2,92	3,32	3,68	3,99	4,26	4,46	4,61	4,69	4,69	4,61	4,45	3,84	2,83	
7000	2,55	2,99	3,40	3,76	4,07	4,33	4,52	4,64	4,70	4,67	4,55	4,34	3,62	2,45	

Yellow area: at these conditions life's reduction is expected.
Light blue area: at these conditions linear speed exceeds 30 m/s, we suggest to use special pulleys.
Green area: both of the above conditions exist.

BASIC PERFORMANCE Pb IN kW FOR ISORAN H AND H DD - 25 mm WIDE (kW / 25 mm)													
d (mm)	56,60	64,68	72,77	80,85	88,94	97,02	105,11	113,19	121,28	129,36	145,53	161,70	194,04
z	14	16	18	20	22	24	26	28	30	32	36	40	48
rpm													
100	0,18	0,21	0,23	0,26	0,29	0,31	0,34	0,36	0,39	0,42	0,47	0,52	0,62
200	0,36	0,42	0,47	0,52	0,57	0,62	0,68	0,73	0,78	0,83	0,93	1,04	1,25
400	0,73	0,83	0,93	1,04	1,14	1,25	1,35	1,45	1,56	1,66	1,87	2,07	2,49
500	0,91	1,04	1,17	1,30	1,43	1,56	1,69	1,82	1,94	2,07	2,33	2,59	3,10
600	1,09	1,25	1,40	1,56	1,71	1,87	2,02	2,18	2,33	2,49	2,79	3,10	3,71
700	1,27	1,45	1,63	1,82	2,00	2,18	2,36	2,54	2,72	2,90	3,25	3,61	4,32
725	1,32	1,51	1,69	1,88	2,07	2,25	2,44	2,63	2,81	3,00	3,37	3,74	4,47
800	1,45	1,66	1,87	2,07	2,28	2,49	2,69	2,90	3,10	3,31	3,71	4,12	4,92
900	1,63	1,87	2,10	2,33	2,56	2,79	3,02	3,25	3,48	3,71	4,17	4,62	5,51
950	1,72	1,97	2,22	2,46	2,70	2,95	3,19	3,43	3,67	3,91	4,39	4,87	5,81
1000	1,82	2,07	2,33	2,59	2,84	3,10	3,36	3,61	3,86	4,12	4,62	5,12	6,10
1100	2,00	2,28	2,56	2,84	3,13	3,41	3,69	3,97	4,24	4,52	5,07	5,61	6,68
1200	2,18	2,49	2,79	3,10	3,41	3,71	4,02	4,32	4,62	4,92	5,51	6,10	7,25
1300	2,36	2,69	3,02	3,36	3,69	4,03	4,34	4,67	4,99	5,31	5,95	6,58	7,80
1400		2,90	3,25	3,61	3,97	4,32	4,67	5,02	5,36	5,71	6,39	7,06	8,35
1425		2,95	3,31	3,67	4,03	4,39	4,75	5,10	5,46	5,81	6,50	7,17	8,49
1500		3,10	3,48	3,86	4,24	4,62	4,99	5,36	5,73	6,10	6,82	7,53	8,89
1600		3,31	3,71	4,12	4,52	4,92	5,31	5,71	6,10	6,48	7,25	7,99	9,41
1700		3,51	3,94	4,37	4,79	5,22	5,63	6,05	6,46	6,87	7,67	8,44	9,92
1800		3,71	4,17	4,62	5,07	5,51	5,95	6,39	6,82	7,25	8,08	8,89	10,42
1900		3,91	4,39	4,87	5,34	5,81	6,27	6,72	7,17	7,62	8,49	9,33	10,90
2000		4,12	4,62	5,12	5,61	6,10	6,58	7,06	7,53	7,99	8,89	9,76	11,37
2200		4,52	5,07	5,61	6,15	6,68	7,20	7,71	8,22	8,71	9,67	10,58	12,25
2400		4,92	5,51	6,10	6,68	7,25	7,80	8,35	8,89	9,41	10,42	11,17	13,06
2600			5,95	6,58	7,20	7,80	8,40	8,98	9,54	10,09	11,14	12,11	13,79
2800			6,39	7,06	7,71	8,35	8,98	9,59	10,17	10,74	11,82	12,80	14,44
2850			6,50	7,17	7,84	8,49	9,12	9,73	10,33	10,90	11,98	12,96	14,58
3000			6,82	7,53	8,22	8,89	9,54	10,17	10,78	11,37	12,46	13,44	14,99
3200			7,25	7,99	8,71	9,41	10,09	10,74	11,37	11,97	13,06	14,02	15,44
3400				8,44	9,20	9,92	10,62	11,29	11,93	12,53	13,62	14,54	15,79
3600				8,89	9,67	10,42	11,14	11,82	12,46	13,06	14,13	14,99	16,02
3800				9,33	10,13	10,90	11,63	12,32	12,96	13,56	14,58	15,37	16,14
4000				9,76	10,58	11,37	12,11	12,80	13,44	14,02	14,99	15,68	16,13
4200				10,17	11,02	11,82	12,56	13,25	13,88	14,44	15,34	15,92	15,98
4400				10,58	11,45	12,25	13,00	13,68	14,82	14,82	15,63	16,07	15,70
4600				10,98	11,86	12,67	13,41	14,07	14,65	15,15	15,86	16,14	15,28
4800				11,37	12,25	13,06	13,79	14,44	14,99	15,44	16,02	16,13	14,70
5000				11,75	12,63	13,44	14,15	14,77	15,28	15,68	16,12	16,02	13,96
5200				12,11	13,00	13,79	14,49	15,07	15,54	15,88	16,15	15,81	13,05
5400				12,46	13,15	14,13	14,79	15,34	15,75	16,02	16,10	15,51	11,98
5600				12,80	13,64	14,44	15,07	15,57	15,92	16,11	16,48	15,10	10,73
5800				13,13	13,99	14,72	15,32	15,76	16,04	16,15	16,79	14,58	9,29
6000				13,44	14,28	14,99	15,54	15,92	16,12	16,13	15,51	13,96	7,66

Yellow area: at these conditions life's reduction is expected.
Light blue area: at these conditions linear speed exceeds 30 m/s, we suggest to use special pulleys.
Green area: both of the above conditions exist.

BASIC PERFORMANCE Pb IN kW FOR ISORAN XH - 25 mm WIDE (kW / 25 mm)											
d (mm)	127,34	141,49	155,64	169,79	183,94	198,08	212,23	226,38	240,53	254,68	282,98
z	18	20	22	24	26	28	30	32	34	36	40
rpm											
100	0,56	0,62	0,68	0,74	0,81	0,87	0,93	0,99	1,05	1,12	1,24
200	1,12	1,24	1,36	1,49	1,61	1,73	1,86	1,98	2,10	2,23	2,47
300	1,67	1,86	2,04	2,23	2,41	2,60	2,78	2,96	3,15	3,33	3,70
400	2,23	2,47	2,72	2,96	3,21	3,45	3,70	3,94	4,18	4,42	4,90
500	2,78	3,09	3,39	3,70	4,00	4,30	4,60	4,90	5,20	5,49	6,08
600	3,33	3,70	4,06	4,42	4,78	5,14	5,49	5,84	6,20	6,54	7,23
700	3,88	4,30	4,72	5,14	5,55	5,96	6,37	6,77	7,17	7,57	8,34
725	4,01	4,45	4,88	5,31	5,74	6,17	6,59	7,00	7,41	7,82	8,61
800	4,42	4,90	5,37	5,84	6,31	6,77	7,23	7,68	8,12	8,56	9,41
900	4,96	5,49	6,02	6,54	7,06	7,57	8,07	8,56	9,04	9,52	10,44
950	5,23	5,79	6,34	6,89	7,43	7,96	8,48	8,99	9,49	9,98	10,93
1000	5,49	6,08	6,66	7,23	7,79	8,34	8,88	9,41	9,93	10,44	11,41
1100	6,02	6,66	7,28	7,90	8,51	9,10	9,67	10,24	10,78	11,31	12,32
1200	6,54	7,23	7,90	8,56	9,20	9,83	10,44	11,03	11,59	12,14	13,16
1300	7,06	7,79	8,51	9,20	9,88	10,54	11,17	11,78	12,36	12,92	13,93
1400		8,34	9,10	9,83	10,54	11,22	11,87	12,49	13,08	13,63	14,63
1425		8,48	9,24	9,98	10,70	11,38	12,04	12,66	13,25	13,80	14,79
1500		8,88	9,67	10,44	11,17	11,87	12,53	13,16	13,75	14,29	15,24
1600		9,41	10,24	11,03	11,78	12,49	13,16	13,78	14,36	14,88	15,76
1700		9,93	10,78	11,59	12,36	13,08	13,75	14,36	14,91	15,40	16,18
1800			11,31	12,14	12,92	13,63	14,29	14,88	15,40	15,85	16,50
1900			11,82	12,66	13,44	14,15	14,79	15,35	15,83	16,22	16,72
2000			12,32	13,16	13,93	14,63	15,24	15,76	16,18	16,36	16,82
2100			12,79	13,63	14,39	15,06	15,64	16,10	16,46	16,50	16,80
2200			13,24	14,08	14,82	15,46	15,98	16,39	16,66	16,70	16,65
2300			13,67	14,49	15,21	15,80	16,27	16,60	16,79	16,81	16,37
2400			14,08	14,88	15,56	16,10	16,50	16,75	16,82	16,82	15,96
2500			14,46	15,24	15,87	16,35	16,67	16,82	16,77	16,72	15,40
2600			14,82	15,56	16,14	16,55	16,78	16,81	16,63	16,53	16,69
2700			15,15	15,85	16,37	16,70	16,82	16,72	16,39	15,80	13,82
2800				16,10	16,55	16,79	16,80	16,56	16,05	15,27	12,79
2850				16,22	16,63	16,81	16,76	16,44	15,84	14,95	12,22
2900				16,32	16,69	16,82	16,70	16,30	15,61	14,61	11,60
3000				16,50	16,78	16,80	16,53	15,96	15,06	13,82	10,23
3200				16,75	16,81	16,56	15,96	14,99	13,63	11,85	
3400				16,82	16,63	16,05	15,06	13,63	11,72		
3600				16,72	16,22	15,27	13,82	11,85			
3800				16,44	15,58	14,19	12,22				
4000				15,96	14,69	12,79	10,23				
4200				15,27	13,53	11,07					
4400				14,36	12,10						
4500				13,82	11,27						

Yellow area: at these conditions life's reduction is expected.
Light blue area: at these conditions linear speed exceeds 30 m/s, we suggest to use special pulleys.
Green area: both of the above conditions exist.

BASIC PERFORMANCE Pb IN kW FOR ISORAN XXH - 25 mm WIDE (kW / 25 mm)								
d (mm)	181,91	202,13	222,34	242,55	262,76	303,19	343,62	404,25
z	18	20	22	24	26	30	34	40
rpm								
100	0,98	1,09	1,19	1,30	1,41	1,63	1,84	2,17
200	1,95	2,17	2,38	2,60	2,81	3,24	3,67	4,31
300	2,92	3,24	3,57	3,89	4,21	4,84	5,47	6,41
400	3,89	4,31	4,74	5,16	5,58	6,41	7,24	8,45
500	4,84	5,37	5,89	6,41	6,93	7,94	8,94	10,39
600	5,79	6,41	7,03	7,64	8,25	9,43	10,58	12,22
700	6,72	7,44	8,15	8,84	9,53	10,86	12,13	13,91
725	6,95	7,69	8,42	9,14	9,84	11,20	12,50	14,31
800	7,64	8,45	9,23	10,01	10,76	12,22	13,58	15,45
900	8,54	9,43	10,29	11,13	11,95	13,50	14,93	16,80
950	8,99	9,91	10,81	11,68	12,52	14,11	15,55	17,40
1000	9,43	10,39	11,32	12,22	13,08	14,70	16,15	17,95
1100	10,29	11,32	12,30	13,25	14,15	15,80	17,23	18,88
1200	11,13	12,22	13,25	14,23	15,15	16,80	18,16	19,56
1300	11,95	13,08	14,15	15,15	16,08	17,69	18,92	19,97
1400		13,91	15,00	16,01	16,93	18,45	19,50	20,08
1425		14,11	15,21	16,22	17,12	18,62	16,92	20,06
1500		14,70	15,80	16,80	17,69	19,07	18,89	19,88
1600		15,45	16,55	17,52	18,35	19,56	20,07	19,34
1700		16,15	17,23	18,16	18,92	19,89	20,03	18,44
1800		16,80	17,85	18,71	19,38	20,06	19,75	17,15
1900		17,40	18,40	19,18	19,73	20,06	19,23	15,46
2000		17,45	18,88	19,56	19,97	19,88	18,44	13,34
2100		18,45	19,29	19,84	20,08	19,51	17,37	10,77
2200		18,88	19,61	20,01	20,05	18,93	16,01	
2300		19,25	19,86	20,08	19,90	18,15	14,35	
2400		19,56	20,01	20,04	19,60	17,15	12,37	
2500		19,80	20,08	19,88	19,15	15,92	10,05	
2600		19,97	20,05	19,60	18,54	14,46		
2700		20,06	19,93	19,19	17,78	12,74		
2800		20,08	19,71	18,65	16,85	10,77		
2850		20,06	19,55	18,33	16,32			
2900		20,02	19,37	17,97	15,74			
3000		19,88	18,93	17,15	14,56			
3100		19,65	18,38	16,19	12,99			
3200		19,34	17,71	15,07	11,32			
3300		18,89	16,93	13,80				
3400		18,44	16,01	12,37				
3500		17,84	14,97	10,77				

Yellow area: at these conditions life's reduction is expected.
Light blue area: at these conditions linear speed exceeds 30 m/s, we suggest to use special pulleys.
Green area: both of the above conditions exist.

ISORAN RPP AND ISORAN RPP DD

Megadyne Isoran RPP and Isoran RPP DD belts are a high power and high precision class of belt. Compared to Isoran Imperial, they can transmit more power in the same width or can allow a reduction of width to transmit the same power. This kind of belt uses a parabolic profile with the purpose to transmit more power and reduce the kind of accidents as tooth jump and to reduce noise.

The parabolic profile has a progressive pressure angle since the tooth root up to the top. This allows to have a taller tooth with the same pitch length. These two features lead to the following advantages:

- Reduction interference between the pulley and the belt and its related wearing comings from the torque peaks;
- Less noise;
- More resistance to tooth jump and to tooth shear;
- Higher transmittable torques;
- Less pre-tension.

Looking at the tooth design, it has a groove on the top. This allows a local deformation leading to the following advantages:

- A smoother engagement;
- A better meshing of the tooth in the pulley groove;
- A more uniform sharing of engaging teeth's stress;
- Less noise because of the smoother engagement;
- Less wearing because of the less slippage during engagement.

RPP profile have been designed even to be interchangeable with existing deep groove profiles and run on pulleys according to ISO 13050.

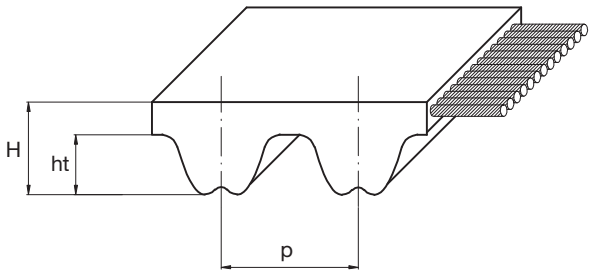

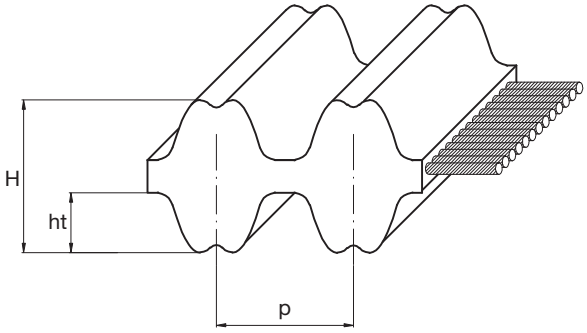

Pitch		RPP3	RPP5	RPP8	RPP14	RPP5 DD	RPP8 DD	RPP14 DD
Pitch length (mm)	p	3	5	8	14	5	8	14
Teeth height (mm)	ht	1,15	2,00	3,20	6,00	2,00	3,20	5,70
Belt height (mm)	H	2,40	3,80	5,40	9,70	5,20	7,80	14,00

Resistance to:	Standard belt resistance
Water	Medium
Acids / Alkalis	None
Solvents	None
Mineral oils	Low
Oils	Low
Greases	Medium
Fuels	None
Environmental agents	Medium

Other features	
Temperature range	Min: -25 °C
	Max: 80 °C
	Max peak: 100 °C
Hardness	74 +/-4 ShA

STANDARD TOLERANCES

Width tolerances				
Belt width (mm)		Tolerance on belt width		
		Belt length (mm)		
More than	Up to	Up to 838	More than 838 up to 1676	More than 1676
-	11,1	+0,5 -0,8	+0,5 -0,8	--
11,1	38,1	±0,8	+0,8 -1,3	+0,8 -1,3
38,1	50,8	+0,8 -1,3	±1,3	+1,3 -1,5
50,8	76,2	+1,3 -1,5	±1,5	+1,5 -2,0
76,2	170,0	+1,3 -1,5	+1,3 -2,0	±2,0

Length tolerances			
Belt length [mm]		Tolerance (mm)	Centre distance tolerance (mm)
More than	Up to		
254	381	±0,45	±0,225
381	508	±0,50	±0,250
508	762	±0,60	±0,300
762	991	±0,65	±0,325
991	1,220	±0,75	±0,375
1,220	1,524	±0,80	±0,400
1,524	1,778	±0,85	±0,425
1,778	2,032	±0,90	±0,450
2,032	2,286	±0,95	±0,475
over 2,286		$\pm [0{,}95 + \left(\frac{L - 2286}{254} \cdot 0{,}03\right)]$	$\pm [0{,}475 + \left(\frac{L - 2286}{254} \cdot 0{,}015\right)]$

Thickness tolerances				
Pitch	Nominal belt tickness (mm)	Tolerance degree (mm)		
		Standard belt	Grade 2	Grade 1
RPP3	2,40	±0,60	±0,25	±0,15
RPP5	3,80	±0,60	±0,25	±0,15
RPP8	5,40	±0,60	±0,25	±0,15
RPP14	9,70	±0,60	±0,25	±0,15

For specific application where you might require different tolerances, please contact our Application Department.

STANDARD WIDTHS												
Pitch	Belt widths											
	6,00	9,00	15,00	20,00	25,00	30,00	40,00	50,00	55,00	85,00	115,00	170,00
RPP3	•	•	•									
RPP5 / RPP5 DD		•	•		•							
RPP8 / RPP8 DD				•		•		•		•		
RPP14 / RPP14 DD							•		•	•	•	•

RANGE

RRP3	
Code	Pitch length (mm)
90 RPP3	90,00
105 RPP3	105,00
129 RPP3	129,00
141 RPP3	141,00
144 RPP3	144,00
147 RPP3	147,00
150 RPP3	150,00
159 RPP3	159,00
168 RPP3	168,00
174 RPP3	174,00
177 RPP3	177,00
180 RPP3	180,00
186 RPP3	186,00
195 RPP3	195,00
201 RPP3	201,00
204 RPP3	204,00
210 RPP3	210,00
213 RPP3	213,00
225 RPP3	225,00
231 RPP3	231,00
240 RPP3	240,00
243 RPP3	243,00
246 RPP3	246,00
249 RPP3	249,00
252 RPP3	252,00
255 RPP3	255,00
261 RPP3	261,00
264 RPP3	264,00
267 RPP3	267,00
270 RPP3	270,00
276 RPP3	276,00
285 RPP3	285,00
288 RPP3	288,00
291 RPP3	291,00
297 RPP3	297,00
300 RPP3	300,00
312 RPP3	312,00
318 RPP3	318,00
327 RPP3	327,00
330 RPP3	330,00
333 RPP3	333,00
336 RPP3	336,00
339 RRP3	339,00
345 RPP3	345,00
351 RPP3	351,00
357 RPP3	357,00
363 RPP3	363,00
375 RPP3	375,00
384 RPP3	384,00
390 RPP3	390,00
393 RPP3	393,00
405 RPP3	405,00
420 RPP3	420,00
432 RPP3	432,00
447 RPP3	447,00
474 RPP3	474,00
480 RPP3	480,00
486 RPP3	486,00
489 RPP3	489,00
495 RPP3	495,00
501 RPP3	501,00
510 RPP3	510,00
513 RPP3	513,00
522 RPP3	522,00
531 RPP3	531,00
537 RPP3	537,00
564 RPP3	564,00
570 RPP3	570,00
576 RPP3	576,00
579 RPP3	579,00
582 RPP3	582,00
597 RPP3	597,00
600 RPP3	600,00
633 RPP3	633,00
648 RPP3	648,00
669 RPP3	669,00
711 RPP3	711,00
735 RPP3	735,00
738 RPP3	738,00
756 RPP3	756,00
804 RPP3	804,00
882 RPP3	882,00
945 RPP3	945,00
1062 RPP3	1062,00
1125 RPP3	1125,00
1245 RPP3	1245,00
1263 RPP3	1263,00
1500 RPP3	1500,00
1530 RPP3	1530,00
1863 RPP3	1863,00

RPP5	
Code	Pitch length (mm)
180 RPP5	180,00
225 RPP5	225,00
235 RPP5	235,00
245 RPP5	245,00
255 RPP5	255,00
265 RPP5	265,00
270 RPP5	270,00
280 RPP5	280,00
285 RPP5	285,00
295 RPP5	295,00
300 RPP5	300,00
305 RPP5	305,00
325 RPP5	325,00
345 RPP5	345,00
350 RPP5	350,00
375 RPP5	375,00
400 RPP5	400,00
420 RPP5	420,00
425 RPP5	425,00
450 RPP5	450,00
455 RPP5	455,00
460 RPP5	460,00
465 RPP5	465,00
475 RPP5	475,00
500 RPP5	500,00
525 RPP5	525,00
535 RPP5	535,00
565 RPP5	565,00
575 RPP5	575,00
580 RPP5	580,00
600 RPP5	600,00
610 RPP5	610,00
615 RPP5	615,00
635 RPP5	635,00
640 RPP5	640,00
670 RPP5	670,00
675 RPP5	675,00
700 RPP5	700,00
705 RPP5	705,00
710 RPP5	710,00
725 RPP5	725,00
740 RPP5	740,00
750 RPP5	750,00
755 RPP5	755,00
800 RPP5	800,00
835 RPP5	835,00
850 RPP5	850,00
890 RPP5	890,00
900 RPP5	900,00
935 RPP5	935,00
940 RPP5	940,00
950 RPP5	950,00
980 RPP5	980,00
1000 RPP5	1000,00
1025 RPP5	1025,00
1050 RPP5	1050,00
1100 RPP5	1100,00
1125 RPP5	1125,00
1135 RPP5	1135,00
1195 RPP5	1195,00
1200 RPP5	1200,00
1240 RPP5	1240,00
1270 RPP5	1270,00
1420 RPP5	1420,00
1500 RPP5	1500,00
1595 RPP5	1595,00
1605 RPP5	1605,00
1690 RPP5	1690,00
1790 RPP5	1790,00
1800 RPP5	1800,00
1870 RPP5	1870,00
1895 RPP5	1895,00
1945 RPP5	1945,00
2000 RPP5	2000,00
2250 RPP5	2250,00
2525 RPP5	2525,00

RPP8	
Code	Pitch length (mm)
248 RPP8	248,00
288 RPP8	288,00
320 RPP8	320,00
352 RPP8	352,00
360 RPP8	360,00
376 RPP8	376,00
384 RPP8	384,00
408 RPP8	408,00
416 RPP8	416,00
424 RPP8	424,00
456 RPP8	456,00
480 RPP8	480,00
536 RPP8	536,00
544 RPP8	544,00
560 RPP8	560,00
600 RPP8	600,00
608 RPP8	608,00
632 RPP8	632,00
640 RPP8	640,00
680 RPP8	680,00
720 RPP8	720,00
760 RPP8	760,00
800 RPP8	800,00
840 RPP8	840,00
880 RPP8	880,00
896 RPP8	896,00
920 RPP8	920,00
960 RPP8	960,00
1000 RPP8	1000,00
1040 RPP8	1040,00
1080 RPP8	1080,00
1120 RPP8	1120,00
1200 RPP8	1200,00
1224 RPP8	1224,00
1280 RPP8	1280,00
1352 RPP8	1352,00
1424 RPP8	1424,00
1440 RPP8	1440,00
1464 RPP8	1464,00
1600 RPP8	1600,00
1680 RPP8	1680,00
1760 RPP8	1760,00
1792 RPP8	1792,00
1800 RPP8	1800,00
1904 RPP8	1904,00
2000 RPP8	2000,00
2200 RPP8	2200,00
2240 RPP8	2240,00
2272 RPP8	2272,00
2400 RPP8	2400,00
2520 RPP8	2520,00
2600 RPP8	2600,00
2800 RPP8	2800,00
2840 RPP8	2840,00
3048 RPP8	3048,00
3200 RPP8	3200,00
3280 RPP8	3280,00
3600 RPP8	3600,00
4000 RPP8	4000,00
4400 RPP8	4400,00

RPP14	
Code	Pitch length (mm)
966 RPP14	966,00
994 RPP14	994,00
1092 RPP14	1092,00
1106 RPP14	1106,00
1120 RPP14	1120,00
1190 RPP14	1190,00
1260 RPP14	1260,00
1288 RPP14	1288,00
1344 RPP14	1344,00
1400 RPP14	1400,00
1442 RPP14	1442,00
1568 RPP14	1568,00
1610 RPP14	1610,00
1750 RPP14	1750,00
1764 RPP14	1764,00
1778 RPP14	1778,00
1848 RPP14	1848,00
1890 RPP14	1890,00
1904 RPP14	1904,00
1960 RPP14	1960,00
2100 RPP14	2100,00
2240 RPP14	2240,00
2310 RPP14	2310,00
2380 RPP14	2380,00
2450 RPP14	2450,00
2520 RPP14	2520,00
2590 RPP14	2590,00
2660 RPP14	2660,00
2800 RPP14	2800,00
2968 RPP14	2968,00
3136 RPP14	3136,00
3150 RPP14	3150,00
3304 RPP14	3304,00
3360 RPP14	3360,00
3500 RPP14	3500,00
3850 RPP14	3850,00
3920 RPP14	3920,00
4326 RPP14	4326,00
4410 RPP14	4410,00
4578 RPP14	4578,00
4956 RPP14	4956,00

RPP5 DD	
Code	Pitch length (mm)
600 RPP5 DD	600,00
610 RPP5 DD	610,00
615 RPP5 DD	615,00
635 RPP5 DD	635,00
640 RPP5 DD	640,00
670 RPP5 DD	670,00
675 RPP5 DD	675,00
700 RPP5 DD	700,00
705 RPP5 DD	705,00
710 RPP5 DD	710,00
725 RPP5 DD	725,00
740 RPP5 DD	740,00
750 RPP5 DD	750,00
755 RPP5 DD	755,00
800 RPP5 DD	800,00
835 RPP5 DD	835,00
850 RPP5 DD	850,00
890 RPP5 DD	890,00
900 RPP5 DD	900,00
935 RPP5 DD	935,00
940 RPP5 DD	940,00
950 RPP5 DD	950,00
980 RPP5 DD	980,00
1000 RPP5 DD	1000,00
1025 RPP5 DD	1025,00
1050 RPP5 DD	1050,00
1100 RPP5 DD	1100,00
1125 RPP5 DD	1125,00
1135 RPP5 DD	1135,00
1195 RPP5 DD	1195,00
1200 RPP5 DD	1200,00
1240 RPP5 DD	1240,00
1270 RPP5 DD	1270,00
1420 RPP5 DD	1420,00
1500 RPP5 DD	1500,00
1595 RPP5 DD	1595,00
1605 RPP5 DD	1605,00
1690 RPP5 DD	1690,00
1790 RPP5 DD	1790,00
1800 RPP5 DD	1800,00
1870 RPP5 DD	1870,00
1895 RPP5 DD	1895,00
1945 RPP5 DD	1945,00
2000 RPP5 DD	2000,00
2250 RPP5 DD	2250,00
2525 RPP5 DD	2525,00

RPP8 DD	
Code	Pitch length (mm)
600 RPP8 DD	600,00
608 RPP8 DD	608,00
632 RPP8 DD	632,00
640 RPP8 DD	640,00
680 RPP8 DD	680,00
720 RPP8 DD	720,00
760 RPP8 DD	760,00
800 RPP8 DD	800,00
840 RPP8 DD	840,00
880 RPP8 DD	880,00
896 RPP8 DD	896,00
920 RPP8 DD	920,00
960 RPP8 DD	960,00
1000 RPP8 DD	1000,00
1040 RPP8 DD	1040,00
1080 RPP8 DD	1080,00
1120 RPP8 DD	1120,00
1200 RPP8 DD	1200,00
1224 RPP8 DD	1224,00
1280 RPP8 DD	1280,00
1352 RPP8 DD	1352,00
1424 RPP8 DD	1424,00
1440 RPP8 DD	1440,00
1464 RPP8 DD	1464,00
1600 RPP8 DD	1600,00
1680 RPP8 DD	1680,00
1760 RPP8 DD	1760,00
1792 RPP8 DD	1792,00
1800 RPP8 DD	1800,00
1904 RPP8 DD	1904,00
2000 RPP8 DD	2000,00
2200 RPP8 DD	2200,00
2240 RPP8 DD	2240,00
2272 RPP8 DD	2272,00
2400 RPP8 DD	2400,00
2520 RPP8 DD	2520,00
2600 RPP8 DD	2600,00
2800 RPP8 DD	2800,00
2840 RPP8 DD	2840,00
3048 RPP8 DD	3048,00
3200 RPP8 DD	3200,00
3280 RPP8 DD	3280,00
3600 RPP8 DD	3600,00
4000 RPP8 DD	4000,00
4400 RPP8 DD	4400,00

RPP14 DD	
Code	Pitch length (mm)
966 RPP14 DD	966,00
994 RPP14 DD	994,00
1092 RPP14 DD	1092,00
1106 RPP14 DD	1106,00
1120 RPP14 DD	1120,00
1190 RPP14 DD	1190,00
1260 RPP14 DD	1260,00
1288 RPP14 DD	1288,00
1344 RPP14 DD	1344,00
1400 RPP14 DD	1400,00
1442 RPP14 DD	1442,00
1568 RPP14 DD	1568,00
1610 RPP14 DD	1610,00
1750 RPP14 DD	1750,00
1764 RPP14 DD	1764,00
1778 RPP14 DD	1778,00
1848 RPP14 DD	1848,00
1890 RPP14 DD	1890,00
1904 RPP14 DD	1904,00
1960 RPP14 DD	1960,00
2100 RPP14 DD	2100,00
2240 RPP14 DD	2240,00
2310 RPP14 DD	2310,00
2380 RPP14 DD	2380,00
2450 RPP14 DD	2450,00
2520 RPP14 DD	2520,00
2590 RPP14 DD	2590,00
2660 RPP14 DD	2660,00
2800 RPP14 DD	2800,00
2968 RPP14 DD	2968,00
3136 RPP14 DD	3136,00
3150 RPP14 DD	3150,00
3304 RPP14 DD	3304,00
3360 RPP14 DD	3360,00
3500 RPP14 DD	3500,00
3850 RPP14 DD	3850,00
3920 RPP14 DD	3920,00
4326 RPP14 DD	4326,00
4410 RPP14 DD	4410,00
4578 RPP14 DD	4578,00
4956 RPP14 DD	4956,00

BASIC PERFORMANCE Pb IN W FOR ISORAN RPP3 - 6 mm WIDE (W / 6 mm)															
d (mm)	9,55	11,46	13,37	15,28	17,19	19,10	22,92	26,74	30,56	38,20	45,84	53,48	61,12	68,75	76,39
z	10	12	14	16	18	20	24	28	32	40	48	56	64	72	80
rpm															
10	1	1	1	1	2	2	2	3	3	4	5	6	8	9	10
20	1	2	2	2	3	3	4	5	6	7	9	11	13	15	17
30	2	2	3	3	4	4	5	6	7	10	12	15	17	20	22
50	3	3	4	5	5	6	8	9	11	14	18	21	25	29	33
70	3	4	5	6	7	8	10	12	14	18	23	28	32	37	42
100	5	6	7	8	9	10	13	16	18	24	30	36	42	49	55
200	8	10	11	13	16	18	22	26	31	40	50	61	71	82	93
300	10	13	16	18	21	24	30	36	42	55	68	82	96	111	126
400	13	16	19	23	26	30	37	44	62	80	100	120	141	163	185
500	15	19	23	27	31	35	44	52	71	92	115	138	162	187	212
600	17	22	26	31	35	40	50	60	79	103	129	155	182	209	237
700	20	24	29	34	40	45	56	67	87	114	142	171	201	231	262
800	22	27	32	38	44	50	62	75	96	125	155	187	219	253	286
900	24	29	35	42	48	54	68	81	103	135	168	202	237	273	310
1000	26	32	38	45	52	59	73	88	111	145	181	217	255	293	332
1100	28	34	41	48	56	63	79	95	119	155	193	232	272	313	355
1200	29	37	44	52	59	67	84	101	126	164	204	246	288	332	376
1300	31	39	47	55	63	72	89	107	133	174	216	260	305	351	397
1400	33	41	49	58	67	76	94	113	140	183	227	273	321	369	418
1500	35	43	52	61	70	80	99	119	147	192	239	287	336	387	438
1600	36	45	55	64	74	84	104	125	154	201	250	300	352	404	458
1700	38	47	57	67	77	88	109	131	160	209	260	313	367	422	477
1800	40	50	60	70	81	91	114	137	167	218	271	326	381	438	496
1900	41	52	62	73	84	95	118	142	174	227	281	338	396	455	515
2000	43	54	64	76	87	99	123	148	199	259	322	386	452	519	586
2400	49	61	74	87	100	113	141	169	223	290	360	431	504	578	652
2800	55	69	83	97	112	127	158	190	246	320	396	474	553	633	713
3200	61	76	92	108	124	140	174	210	268	348	430	514	599	684	768
3600	67	83	100	117	135	153	190	229	289	375	463	552	642	731	819
4000	72	90	108	127	146	166	206	247	338	438	538	637	735	830	922
5000	85	106	128	150	172	195	242	290	384	493	602	707	808	903	989
6000	98	122	146	171	197	223	275	329	425	542	655	762	859	945	1017
7000	110	136	163	191	220	248	307	366	462	584	697	799	886	954	999
8000	121	150	180	210	241	273	336	399	522	644	745	818	858	858	813
10000	142	176	211	246	281	316	387	456	564	670	736	752	706	588	
12000	162	200	239	277	316	354	429	499	585	685	664	586			
14000	180	222	264	305	346	386	461	528							

BASIC PERFORMANCE Pb IN W FOR ISORAN RPP5 AND RPP5 DD - 9 mm WIDE (W / 9 mm)													
d (mm)	22,28	25,46	28,65	31,83	38,20	44,56	50,93	63,66	76,39	89,13	101,86	114,59	127,32
z	14	16	18	20	24	28	32	40	48	56	64	72	80
rpm													
10	5	6	7	7	9	11	13	15	17	19	21	26	30
20	8	10	11	13	16	19	22	25	29	32	36	43	51
30	11	13	15	17	21	25	30	34	39	44	49	59	69
50	16	19	22	25	31	37	44	51	57	64	71	86	101
70	21	25	28	32	40	48	56	65	74	83	92	110	130
100	27	32	37	42	52	63	74	85	96	108	120	144	169
200	46	54	62	71	88	106	124	143	162	182	202	243	285
300	62	73	84	96	119	143	168	194	220	246	273	329	386
400	77	91	105	119	148	178	209	240	273	306	339	408	479
500	91	107	124	140	175	210	247	284	322	361	401	482	566
600	105	123	142	161	200	241	283	325	369	414	459	553	648
700	118	138	159	181	225	270	317	365	414	465	516	620	727
800	130	153	176	200	248	299	351	404	458	513	570	685	803
900	142	167	192	218	271	326	383	441	500	560	622	748	877
1000	154	180	208	236	293	353	414	477	541	606	673	808	948
1100	165	194	223	253	315	379	445	519	581	651	722	867	1017
1200	176	207	238	270	336	404	474	546	619	694	770	925	1084
1300	187	220	253	287	357	429	504	580	657	736	817	981	1149
1400	198	232	267	303	377	454	532	612	694	778	862	1035	1212
1500	208	244	281	319	397	477	560	644	713	818	907	1089	1274
1600	219	256	295	335	417	501	587	676	776	858	951	1141	1335
1700	229	268	309	351	436	524	614	707	801	897	994	1192	1393
1800	239	280	322	366	455	547	641	737	835	935	1036	1241	1451
1900	249	292	336	381	473	569	667	767	869	972	1077	1290	1507
2000	258	303	349	396	492	591	692	896	902	1009	1117	1338	1562
2400	296	347	399	453	563	675	791	909	1028	1149	1271	1518	1767
2800	332	389	448	507	630	755	884	1014	1146	1279	1413	1682	1650
3200	366	429	494	559	694	831	971	1113	1256	1400	1543	1830	2112
3600	399	468	538	609	755	903	1054	1206	1359	1511	1663	1962	2252
4000	432	505	581	657	813	972	1132	1293	1453	1613	1770	2077	2368
5000	508	594	681	769	948	1128	1307	1484	1657	1825	1886	2286	2547
6000	578	675	773	871	1068	1262	1452	1635	1809	1971	2120	2372	2548
7000	644	749	856	962	1171	1374	1566	1744	1905	2046	2164	2318	2347
8000	704	818	931	1043	1259	1462	1646	1806	1939	2040	2105	2108	1914
10000	811	935	1056	1171	1382	1559	1693	1776	1800	1756	1637		
12000	899	1026	1144	1252	1427	1538	1570	1507					
14000	966	1087	1193	1280	1386	1382	1248						

RPP8 - RPP8 DD

BASIC PERFORMANCE Pb IN kW FOR ISORAN RPP8 AND RPP8 DD - 20 mm WIDE (kW / 20 mm)																
d (mm)	56,02	61,12	66,21	71,30	76,39	81,49	86,58	91,67	96,77	101,86	112,05	122,23	142,60	162,97	183,35	203,72
z	22	24	26	28	30	32	34	36	38	40	44	48	56	64	72	80
rpm																
10	0,06	0,07	0,08	0,08	0,09	0,10	0,11	0,11	0,12	0,13	0,14	0,16	0,19	0,22	0,26	0,29
20	0,11	0,12	0,13	0,14	0,15	0,16	0,18	0,19	0,20	0,22	0,24	0,27	0,32	0,38	0,44	0,49
30	0,14	0,16	0,17	0,19	0,21	0,22	0,24	0,26	0,27	0,29	0,33	0,36	0,44	0,51	0,59	0,67
50	0,21	0,23	0,26	0,28	0,30	0,33	0,35	0,38	0,40	0,43	0,48	0,53	0,64	0,75	0,87	0,98
70	0,27	0,30	0,33	0,36	0,39	0,42	0,45	0,49	0,52	0,55	0,62	0,69	0,82	0,97	1,12	1,27
100	0,35	0,39	0,43	0,47	0,51	0,55	0,59	0,63	0,68	0,72	0,81	0,90	1,08	1,27	1,46	1,65
200	0,59	0,66	0,72	0,79	0,86	0,93	1,00	1,07	1,14	1,21	1,36	1,51	1,81	2,13	2,45	2,78
300	0,80	0,89	0,98	1,07	1,16	1,26	1,35	1,45	1,54	1,64	1,84	2,04	2,46	2,88	3,32	3,77
400	0,99	1,10	1,21	1,33	1,44	1,56	1,67	1,79	1,91	2,03	2,28	2,53	3,05	3,57	4,12	4,67
500	1,17	1,30	1,43	1,57	1,70	1,84	1,98	2,12	2,26	2,40	2,70	2,99	3,60	4,22	4,86	5,51
600	1,35	1,49	1,64	1,80	1,95	2,11	2,27	2,43	2,59	2,76	3,09	3,43	4,12	4,83	5,56	6,31
700	1,51	1,68	1,85	2,02	2,19	2,37	2,55	2,73	2,91	3,09	3,47	3,84	4,62	5,42	6,24	7,07
800	1,67	1,85	2,04	2,23	2,42	2,62	2,81	3,01	3,21	3,42	3,83	4,25	5,10	5,98	6,88	7,79
900	1,82	2,02	2,23	2,43	2,64	2,86	3,07	3,29	3,51	3,77	4,18	4,63	5,57	6,52	7,50	8,49
1000	1,97	2,19	2,41	2,63	2,86	3,09	3,32	3,55	3,79	4,03	4,52	5,01	6,01	7,04	8,09	9,16
1100	2,12	2,35	2,59	2,83	3,07	3,31	3,56	3,81	4,07	4,32	4,84	5,37	6,45	7,55	8,67	9,80
1200	2,26	2,51	2,76	3,01	3,27	3,54	3,80	4,07	4,34	4,61	5,16	5,72	6,87	8,03	9,22	10,42
1300	2,40	2,66	2,93	3,20	3,47	3,75	4,03	4,31	4,60	4,89	5,47	6,07	7,27	8,51	9,75	11,02
1400	2,53	2,81	3,09	3,38	3,67	3,96	4,26	4,56	4,86	5,16	5,78	6,40	7,67	8,96	10,27	11,59
1500	2,67	2,96	3,26	3,56	3,86	4,17	4,48	4,79	5,11	5,43	6,07	6,73	8,05	9,40	10,76	12,13
1600	2,80	3,10	3,41	3,73	4,05	4,37	4,69	5,02	5,35	5,69	6,36	7,04	8,43	9,83	11,24	12,66
1700	2,93	3,25	3,57	3,90	4,23	4,57	4,91	5,25	5,59	5,94	6,64	7,35	8,79	10,24	11,50	13,16
1800	3,05	3,39	3,72	4,07	4,41	4,76	5,11	5,47	5,83	6,19	6,92	7,65	9,14	10,64	11,70	13,60
1900	3,18	3,52	3,87	4,23	4,59	4,95	5,32	5,69	6,06	6,43	7,19	7,95	9,48	11,02	12,56	14,09
2000	3,30	3,66	4,02	4,39	4,76	5,14	5,52	5,90	6,28	6,67	7,45	8,23	9,81	11,39	12,97	15,52
2200	3,54	3,92	4,32	4,70	5,10	5,50	5,90	6,31	6,72	7,13	7,95	8,78	10,44	12,09	13,72	15,31
2400	3,77	4,18	4,59	5,00	5,42	5,85	6,27	6,70	7,13	7,56	8,43	9,30	11,03	12,73	14,39	16,00
2600	3,99	4,42	4,86	5,30	5,74	6,18	6,63	7,08	7,53	7,98	8,88	9,78	11,57	13,31	14,99	16,59
2800	4,21	4,66	5,12	5,58	6,04	6,51	6,97	7,44	7,91	8,38	9,31	10,24	12,07	13,83	15,50	17,06
3000	4,42	4,90	5,37	5,85	6,33	6,82	7,30	7,79	8,27	8,76	9,72	10,67	12,52	14,29	15,93	17,43
3500	4,93	5,45	5,97	6,49	7,02	7,54	8,06	8,58	9,10	9,61	10,62	11,60	13,46	15,14		
4000					7,64	8,19	8,73	9,28	9,81	10,33	11,35	12,32	14,08			
4500						8,75	9,31	9,86	10,40	10,92	11,91	12,82				
5000							9,80	10,34	10,86	11,35	12,27	13,08				
5500									11,18	11,63	12,44					
6000									11,36	11,75	12,38					

BASIC PERFORMANCE Pb IN kW FOR ISORAN RPP14 AND RPP14 DD - 40 mm WIDE (kW / 40 mm)																	
d (mm)	124,78	129,23	133,69	142,60	151,51	160,43	169,34	178,25	196,08	213,90	231,73	249,55	267,38	285,21	303,03	320,86	356,51
z	28	29	30	32	34	36	38	40	44	48	52	56	60	64	68	72	80
rpm																	
10	0,43	0,45	0,47	0,51	0,54	0,58	0,62	0,66	0,74	0,82	0,91	0,99	1,08	1,16	1,25	1,34	1,52
20	0,73	0,76	0,79	0,85	0,92	0,98	1,05	1,11	1,25	1,38	1,52	1,67	1,81	1,96	2,10	2,25	2,56
30	0,98	1,03	1,07	1,15	1,24	1,33	1,42	1,51	1,69	1,88	2,07	2,26	2,45	2,65	2,85	3,05	3,46
50	1,44	1,50	1,57	1,69	1,82	1,95	2,08	2,21	2,48	2,75	3,03	3,31	3,60	3,89	4,18	4,48	5,08
70	1,86	1,94	2,02	2,18	2,34	2,51	2,68	2,85	3,19	3,54	3,90	4,26	4,63	5,00	5,38	5,76	6,54
100	2,42	2,53	2,63	2,85	3,06	3,28	3,50	3,72	4,17	4,63	5,10	5,57	6,05	6,54	7,03	7,53	8,54
200	4,08	4,25	4,43	4,79	5,15	5,51	5,88	6,25	7,01	7,78	8,57	9,36	10,17	10,99	11,81	12,65	14,35
300	5,52	5,76	6,00	6,48	6,97	7,47	7,97	8,47	9,50	10,54	11,60	12,67	13,76	14,87	15,98	17,11	19,41
400	6,85	7,14	7,44	8,04	8,64	9,26	9,87	10,50	11,77	13,06	14,37	15,69	17,04	18,40	19,78	21,17	23,99
500	8,09	8,44	8,79	9,49	10,21	10,93	11,66	12,39	13,89	15,40	16,94	18,50	20,08	21,68	23,30	24,92	28,22
600	9,27	9,67	10,07	10,87	11,69	12,51	13,34	14,19	15,89	17,62	19,37	21,15	22,94	24,75	26,58	28,42	32,15
700	10,39	10,84	11,28	12,19	13,10	14,02	14,95	15,89	17,79	19,71	21,67	23,64	25,63	27,64	29,66	31,70	35,80
800	11,47	11,96	12,45	13,45	14,45	15,46	16,48	17,51	19,60	21,71	23,84	26,00	28,17	30,36	32,55	34,76	39,19
900	12,51	13,04	13,58	14,66	15,75	16,85	17,95	19,07	21,33	23,61	25,91	28,23	30,57	32,91	35,26	37,62	42,32
1000	13,51	14,06	14,66	15,82	16,99	18,18	19,37	20,56	22,98	25,42	27,88	30,35	32,82	35,31	37,79	40,27	45,20
1100	14,48	15,10	15,71	16,95	18,20	19,45	20,72	21,99	24,56	27,14	29,74	32,34	34,95	37,55	40,14	42,72	47,81
1200	15,42	16,07	16,72	18,03	19,36	20,69	22,02	23,37	26,07	28,78	31,50	34,22	36,93	39,93	42,30	44,96	50,16
1300	16,33	17,02	17,70	19,08	20,47	21,87	23,28	24,68	27,51	30,34	33,17	35,98	38,78	41,55	44,29	46,98	52,23
1400	17,21	17,93	18,65	20,10	21,55	23,01	24,48	25,94	28,88	31,81	34,73	37,63	40,49	43,31	46,08	48,79	54,01
1500	18,07	18,82	19,57	21,08	22,59	24,11	25,63	27,16	30,18	33,20	36,20	39,15	42,05	44,90	47,67	50,37	55,48
1600	18,90	19,68	20,46	22,02	23,59	25,16	26,73	28,30	31,42	34,51	37,56	40,55	43,47	46,31	49,06	51,71	56,65
1700	19,70	20,50	21,31	22,93	24,55	26,17	27,78	29,39	32,58	35,73	38,81	41,82	44,73	47,55	50,24	52,81	57,49
1800	20,48	21,31	22,14	23,81	25,47	27,13	28,78	30,42	33,67	36,86	39,96	42,96	45,84	48,60	51,21	53,65	58,00
1900	21,23	22,08	22,94	24,65	26,35	28,05	29,73	31,40	34,69	37,90	40,99	43,96	46,79	49,46	51,94	54,23	58,15
2000	21,95	22,83	23,71	25,45	27,19	28,92	30,63	32,32	35,64	38,84	41,92	44,83	47,57	50,12	52,45		
2500	25,19	26,15	27,09	28,96	30,79	32,58	34,32	36,00	39,19	42,11	44,70	46,94					
3000			29,69	31,54	33,31	34,98	36,56	38,03									
3500			31,43	33,10	34,63	35,99	37,19	38,19									
4000				33,55	34,63												

ISORAN SILVER

Megadyne Isoran Silver belts have been developed to give a more powerful alternative to Isoran RPP belts to compete against high performance transmission systems already using chains and gears, that always have a disadvantage in terms of weight, noise, lubrication and maintenance costs.

Because of the greater power they can transmit compared to Isoran RPP, Isoran Silver can be used to improve and easily upgrade already existing drives working with Isoran RPP in the spirit and concept of interchangeability which has identified Megadyne's market approach philosophy in the last years. By the way we always suggest to check that every other transmission component can bare the increased transmitted power.

Under the same transmission conditions, Isoran Silver belts have the same noise level of the Isoran RPP.
Silver timing belts offers to designers:

- Increased performance (by 110% compared to Isoran RPP)
- The possibility to keep using the same RPP pulleys.

Because of these features, replacing an Isoran RPP with an Isoran Silver can allow:

- To reduce belt width thanks to the higher power rate; this allows also to reduce the required pulley width. They both lead to a significant transmission weight reduction.
- To reduce the pulley dimension thanks to the higher power rate; this leads to a lower belt linear speed and to the consequent noise reduction.

Isoran Silver belts have RPP profile, designed even to be interchangeable with existing deep grove profiles and run on pulleys according to ISO 13050.
Isoran Silver belts are antistatic according to BS 2050.

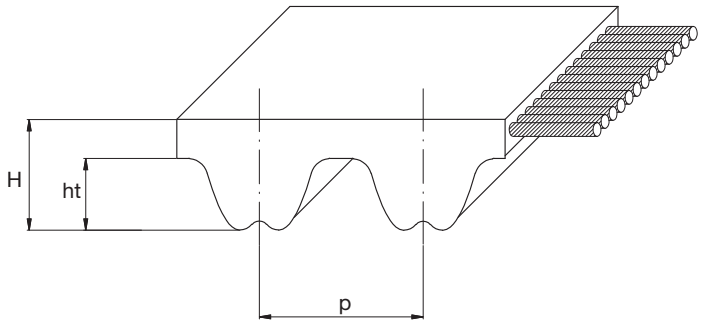

Pitch		SILVER5	SILVER8	SILVER14
Pitch length (mm)	p	5	8	14
Teeth height (mm)	ht	2,00	3,20	6,00
Belt height (mm)	H	3,80	5,40	9,70

Resistance to:	Standard belt resistance
Water	Medium
Acids / Alkalis	None
Solvents	None
Mineral oils	Low
Oils	Low
Greases	Medium
Fuels	None
Environmental agents	Medium

Other features	
Temperature range	Min: -25 °C
	Max: 80 °C
	Max peak: 100 °C
Hardness	90 +/-4 ShA
Antistatic	According to BS 2050

STANDARD TOLERANCES

Width tolerances				
Belt width (mm)		Tolerance on belt width		
		Belt length (mm)		
More than	Up to	Up to 838	More than 838 up to 1676	More than 1676
-	11,1	+0,5 -0,8	+0,5 -0,8	-
11,1	38,1	±0,8	+0,8 -1,3	+0,8 -1,3
38,1	50,8	+0,8 -1,3	±1,3	+1,3 -1,5
50,8	76,2	+1,3 -1,5	±1,5	+1,5 -2,0
76,2	170,0	+1,3 -1,5	+1,3 -2,0	±2,0

Length tolerances			
Belt length (mm)		Tolerance (mm)	Centre distance tolerance (mm)
More than	Up to		
254	381	±0,45	±0,225
381	508	±0,50	±0,250
508	762	±0,60	±0,300
762	991	±0,65	±0,325
991	1,220	±0,75	±0,375
1,220	1,524	±0,80	±0,400
1,524	1,778	±0,85	±0,425
1,778	2,032	±0,90	±0,450
2,032	2,286	±0,95	±0,475
over 2,286		$\pm [0{,}95 + \left(\frac{L - 2286}{254} \cdot 0{,}03\right)]$	$\pm [0{,}475 + \left(\frac{L - 2286}{254} \cdot 0{,}015\right)]$

For specific application where you might require different tolerances, please contact our Application Department.

Thickness tolerances				
Pitch	Nominal belt tickness (mm)	Tolerance degree (mm)		
		Standard belt	Grade 2	Grade 1
SILVER5	3,80	±0,60	±0,25	±0,15
SILVER8	5,40	±0,60	±0,25	±0,15
SILVER14	9,70	±0,60	±0,25	±0,15

STANDARD WIDTHS											
Pitch	Belt widths										
	9,00	15,00	20,00	25,00	30,00	40,00	50,00	55,00	85,00	115,00	170,00
SILVER5	•	•		•							
SILVER8			•		•		•		•		
SILVER14						•		•	•	•	•

RANGE

SILVER5	
Code	Pitch length [mm]
180 SLV5	180,00
225 SLV5	225,00
235 SLV5	235,00
245 SLV5	245,00
255 SLV5	255,00
265 SLV5	265,00
270 SLV5	270,00
280 SLV5	280,00
285 SLV5	285,00
295 SLV5	295,00
300 SLV5	300,00
305 SLV5	305,00
325 SLV5	325,00
345 SLV5	345,00
350 SLV5	350,00
375 SLV5	375,00
400 SLV5	400,00
420 SLV5	420,00
425 SLV5	425,00
450 SLV5	450,00
455 SLV5	455,00
460 SLV5	460,00
465 SLV5	465,00
475 SLV5	475,00
500 SLV5	500,00
525 SLV5	525,00
535 SLV5	535,00
565 SLV5	565,00
575 SLV5	575,00
580 SLV5	580,00
600 SLV5	600,00
610 SLV5	610,00
615 SLV5	615,00
635 SLV5	635,00
640 SLV5	640,00
670 SLV5	670,00
675 SLV5	675,00
700 SLV5	700,00
705 SLV5	705,00
710 SLV5	710,00
725 SLV5	725,00
740 SLV5	740,00
750 SLV5	750,00
755 SLV5	755,00
800 SLV5	800,00
835 SLV5	835,00
850 SLV5	850,00
890 SLV5	890,00
900 SLV5	900,00
935 SLV5	935,00
940 SLV5	940,00
950 SLV5	950,00
980 SLV5	980,00
1000 SLV5	1000,00
1025 SLV5	1025,00
1050 SLV5	1050,00
1100 SLV5	1100,00
1125 SLV5	1125,00
1135 SLV5	1135,00
1195 SLV5	1195,00
1200 SLV5	1200,00
1240 SLV5	1240,00
1270 SLV5	1270,00
1420 SLV5	1420,00
1500 SLV5	1500,00
1595 SLV5	1595,00
1605 SLV5	1605,00
1690 SLV5	1690,00
1790 SLV5	1790,00
1800 SLV5	1800,00
1870 SLV5	1870,00
1895 SLV5	1895,00
1945 SLV5	1945,00
2000 SLV5	2000,00
2250 SLV5	2250,00
2525 SLV5	2525,00

SILVER8	
Code	Pitch length [mm]
248 SLV8	248,00
288 SLV8	288,00
320 SLV8	320,00
352 SLV8	352,00
360 SLV8	360,00
376 SLV8	376,00
384 SLV8	384,00
408 SLV8	408,00
416 SLV8	416,00
424 SLV8	424,00
456 SLV8	456,00
480 SLV8	480,00
536 SLV8	536,00
544 SLV8	544,00
560 SLV8	560,00
600 SLV8	600,00
608 SLV8	608,00
632 SLV8	632,00
640 SLV8	640,00
680 SLV8	680,00
720 SLV8	720,00
760 SLV8	760,00
800 SLV8	800,00
840 SLV8	840,00
880 SLV8	880,00
896 SLV8	896,00
920 SLV8	920,00
960 SLV8	960,00
1000 SLV8	1000,00
1040 SLV8	1040,00
1080 SLV8	1080,00
1120 SLV8	1120,00
1200 SLV8	1200,00
1224 SLV8	1224,00
1280 SLV8	1280,00
1352 SLV8	1352,00
1424 SLV8	1424,00
1440 SLV8	1440,00
1464 SLV8	1464,00
1600 SLV8	1600,00
1680 SLV8	1680,00
1760 SLV8	1760,00
1792 SLV8	1792,00
1800 SLV8	1800,00
1904 SLV8	1904,00
2000 SLV8	2000,00
2200 SLV8	2200,00
2240 SLV8	2240,00
2272 SLV8	2272,00
2400 SLV8	2400,00
2520 SLV8	2520,00
2600 SLV8	2600,00
2800 SLV8	2800,00
2840 SLV8	2840,00
3048 SLV8	3048,00
3200 SLV8	3200,00
3280 SLV8	3280,00
3600 SLV8	3600,00
4000 SLV8	4000,00
4400 SLV8	4400,00

SILVER14	
Code	Pitch length [mm]
966 SLV14	966,00
994 SLV14	994,00
1092 SLV14	1092,00
1106 SLV14	1106,00
1120 SLV14	1120,00
1190 SLV14	1190,00
1260 SLV14	1260,00
1288 SLV14	1288,00
1344 SLV14	1344,00
1400 SLV14	1400,00
1442 SLV14	1442,00
1568 SLV14	1568,00
1610 SLV14	1610,00
1750 SLV14	1750,00
1764 SLV14	1764,00
1778 SLV14	1778,00
1848 SLV14	1848,00
1890 SLV14	1890,00
1904 SLV14	1904,00
1960 SLV14	1960,00
2100 SLV14	2100,00
2240 SLV14	2240,00
2310 SLV14	2310,00
2380 SLV14	2380,00
2450 SLV14	2450,00
2520 SLV14	2520,00
2590 SLV14	2590,00
2660 SLV14	2660,00
2800 SLV14	2800,00
2968 SLV14	2968,00
3136 SLV14	3136,00
3150 SLV14	3150,00
3304 SLV14	3304,00
3360 SLV14	3360,00
3500 SLV14	3500,00
3850 SLV14	3850,00
3920 SLV14	3920,00
4326 SLV14	4326,00
4410 SLV14	4410,00
4578 SLV14	4578,00
4956 SLV14	4956,00

ISORAN SILVER5

BASIC PERFORMANCE Pb IN W FOR SILVER5 - 9 mm wide (W / 9 mm)															
d (mm)	28,65	31,83	35,01	38,20	41,38	44,56	50,93	57,30	63,66	70,03	76,39	89,13	101,86	114,59	127,32
z	18	20	22	24	26	28	32	36	40	44	48	56	64	72	80
rpm															
10	7	8	8	9	10	11	12	14	15	17	18	21	25	28	31
20	12	15	17	18	20	21	25	28	31	34	37	43	49	55	61
30	17	21	25	28	30	32	37	41	46	51	55	64	74	83	92
50	26	32	39	46	50	54	61	69	77	84	92	107	123	138	153
70	35	43	51	61	70	75	86	97	107	118	129	150	172	193	215
100	48	58	70	82	96	107	123	138	153	169	184	215	245	276	307
200	86	105	126	149	173	200	245	276	307	337	368	429	491	552	613
300	122	149	173	211	245	282	363	414	460	506	552	644	736	828	920
400	156	191	229	269	314	361	465	552	613	675	736	859	981	1104	1227
500	189	231	277	326	380	437	563	690	767	843	920	1073	1227	1380	1533
600	221	270	323	381	444	510	657	822	920	1012	1104	1288	1472	1656	1840
700	252	308	369	435	506	582	750	938	1073	1181	1288	1503	1717	1932	2146
800	283	345	413	487	567	653	841	1051	1227	1349	1472	1717	1962	2208	2453
900	313	382	457	539	627	722	930	1162	1380	1518	1656	1932	2208	2483	2759
1000	342	418	500	590	687	790	1017	1272	1533	1686	1840	2146	2453	2759	3065
1100	371	453	543	640	745	857	1104	1380	1685	1855	2024	2361	2698	3035	3372
1200	400	488	585	689	802	923	1189	1486	1815	2024	2208	2575	2943	3310	3678
1300	428	523	626	738	859	989	1273	1592	1943	2192	2391	2790	3188	3586	3984
1400	456	557	667	786	915	1053	1356	1696	2070	2361	2575	3004	3433	3861	4290
1500	484	591	707	834	971	1117	1439	1799	2196	2529	2759	3218	3678	4137	4596
1600	511	624	748	882	1026	1181	1520	1901	2321	2698	2943	3433	3923	4412	4901
1700	538	657	787	928	1080	1243	1601	2002	2444	2866	3127	3647	4167	4687	5207
1800	565	690	827	975	1135	1306	1681	2102	2566	3035	3310	3861	4412	4962	5512
1900	592	723	866	1021	1188	1367	1761	2201	2688	3203	3494	4076	4657	5237	5818
2000	618	755	905	1067	1241	1429	1840	2300	2808	3363	3678	4290	4901	5512	6123
2400	707	863	1034	1219	1419	1632	2102	2628	3208	3843	4412	5146	5879	6611	7342
2800	824	1007	1206	1422	1655	1904	2452	3065	3742	4482	5146	6001	6854	7707	8557
3000	875	1068	1279	1508	1755	2020	2601	3251	3969	4754	5512	6428	7342	8254	9164
3200	908	1109	1329	1567	1823	2098	2701	3376	4122	4937	5821	6854	7828	8800	9770
3600	1022	1248	1494	1762	2050	2359	3038	3797	4636	5552	6546	7707	8800	9891	10978
4000	1118	1365	1635	1928	2243	2581	3324	4154	5070	6073	7160	8557	9770	10978	12181
4500	1236	1509	1807	2131	2480	2853	3674	4591	5604	6712	7912	9618	10978	12331	
5000	1352	1651	1977	2331	2713	3121	4018	5021	6128	7339	8651	10676	12181		
6000	1579	1928	2309	2722	3167	3643	4690	5860	7151	8561	10090	12781			
7000	1800	2197	2631	3102	3609	4151	5342	6673	8142	9746	11484				
8000	2016	2460	2946	3172	4039	4646	5978	7465	9105	10896					
10000	2434	2970	3555	4189	4871	5601	7202								
12000	2836	3459	4139	4875	5667	6514									
14000	3224	3930	4701	5534											

BASIC PERFORMANCE IN kW FOR SILVER8 - 20 mm WIDE (kW / 20 mm)																
d (mm)	56,02	61,12	66,21	71,30	76,39	81,49	86,58	91,67	96,77	101,86	112,05	122,23	142,60	162,97	183,35	203,72
z	22	24	26	28	30	32	34	36	38	40	44	48	56	64	72	80
rpm																
10	0,07	0,08	0,08	0,09	0,09	0,10	0,11	0,11	0,12	0,13	0,14	0,15	0,18	0,20	0,23	0,25
20	0,14	0,15	0,16	0,18	0,19	0,20	0,21	0,23	0,24	0,25	0,28	0,30	0,35	0,40	0,45	0,50
30	0,21	0,23	0,25	0,26	0,28	0,30	0,32	0,34	0,36	0,38	0,42	0,45	0,53	0,60	0,68	0,76
50	0,35	0,38	0,41	0,44	0,47	0,50	0,53	0,57	0,60	0,63	0,69	0,76	0,88	1,01	1,13	1,26
70	0,48	0,53	0,57	0,62	0,66	0,70	0,75	0,79	0,84	0,88	0,97	1,06	1,23	1,41	1,59	1,76
100	0,68	0,75	0,82	0,88	0,94	1,01	1,07	1,13	1,20	1,26	1,38	1,51	1,76	2,01	2,27	2,52
200	1,14	1,26	1,38	1,50	1,62	1,74	1,86	1,98	2,11	2,23	2,48	2,74	3,26	3,78	4,31	4,85
300	1,55	1,71	1,87	2,03	2,19	2,36	2,52	2,69	2,86	3,03	3,37	3,71	4,41	5,12	5,84	6,58
400	1,92	2,12	2,32	2,52	2,72	2,93	3,13	3,34	3,55	3,76	4,18	4,61	5,47	6,35	7,25	8,16
500	2,27	2,51	2,74	2,98	3,22	3,46	3,70	3,94	4,19	4,44	4,94	5,44	6,47	7,51	8,57	9,64
600	2,61	2,87	3,14	3,41	3,69	3,96	4,24	4,52	4,80	5,09	5,66	6,24	7,41	8,61	9,81	11,04
700	2,92	3,22	3,53	3,83	4,14	4,45	4,76	5,08	5,39	5,71	6,35	7,00	8,32	9,65	11,01	12,38
800	3,23	3,56	3,90	4,23	4,57	4,92	5,26	5,61	5,96	6,31	7,02	7,74	9,19	10,66	12,16	13,67
900	3,53	3,89	4,26	4,62	5,00	5,37	5,75	6,12	6,51	6,89	7,66	8,44	10,03	11,64	13,26	14,91
1000	3,82	4,21	4,61	5,00	5,40	5,81	6,22	6,63	7,04	7,45	8,29	9,13	10,84	12,58	14,34	16,11
1100	4,10	4,52	4,95	5,37	5,80	6,24	6,67	7,11	7,56	8,00	8,90	9,80	11,64	13,50	15,38	17,27
1200	4,38	4,83	5,28	5,73	6,19	6,66	7,12	7,59	8,06	8,54	9,49	10,46	12,41	14,39	16,39	18,40
1300	4,65	5,12	5,60	6,09	6,57	7,06	7,56	8,06	8,56	9,06	10,07	11,09	13,16	15,26	17,37	19,50
1400	4,91	5,42	5,92	6,43	6,95	7,47	7,99	8,51	9,04	9,57	10,64	11,72	13,90	16,10	18,32	20,56
1500	5,17	5,70	6,23	6,77	7,31	7,86	8,41	8,96	9,51	10,07	11,19	12,33	14,61	16,93	19,25	21,59
1600	5,43	5,98	6,54	7,10	7,67	8,24	8,82	9,40	9,98	10,56	11,74	12,92	15,32	17,73	20,16	22,59
1700	5,68	6,26	6,84	7,43	8,02	8,62	9,22	9,83	10,43	11,04	12,27	13,51	16,00	18,52	21,04	23,57
1800	5,93	6,53	7,14	7,75	8,37	8,99	9,62	10,25	10,88	11,52	12,80	14,08	16,67	19,28	21,90	24,52
1900	6,17	6,80	7,43	8,07	8,71	9,36	10,01	10,66	11,32	11,98	13,31	14,64	17,33	20,03	22,74	25,44
2000	6,41	7,06	7,72	8,38	9,05	9,72	10,40	11,07	11,75	12,44	13,81	15,20	17,98	20,76	23,55	26,33
2500	7,56	8,33	9,10	9,88	10,66	11,44	12,23	13,02	13,82	14,61	16,21	17,80	20,99	24,16	27,30	30,38
3000	8,65	9,52	10,40	11,28	12,16	13,05	13,94	14,83	15,72	16,61	18,40	20,17	23,69	27,14	30,49	
3500	9,67	10,64	11,62	12,59	13,57	14,55	15,53	16,51	17,49	18,46	20,40	22,32	26,07	29,69		
4000	10,65	11,71	12,77	13,83	14,90	15,95	17,01	18,06	19,11	20,15	22,21	24,23	28,13			
4500	11,58	12,72	13,86	15,00	16,14	17,26	18,39	19,50	20,60	21,69	23,83	25,91				
5000	12,47	13,68	14,89	16,10	17,29	18,48	19,65	20,81	21,95	23,07	25,26					

ISORAN SILVER14

BASIC PERFORMANCE IN kW FOR SILVER14 - 40 mm WIDE (kW / 40 mm)																	
d (mm)	124,78	129,23	133,69	142,60	151,52	160,43	169,34	178,25	196,08	213,90	231,73	249,55	267,38	285,21	303,03	320,86	356,51
z	28	29	30	32	34	36	38	40	44	48	52	56	60	64	68	72	80
rpm																	
10	0,40	0,42	0,43	0,46	0,49	0,52	0,55	0,58	0,63	0,69	0,75	0,81	0,86	0,92	0,98	1,04	1,15
20	0,81	0,84	0,86	0,92	0,98	1,04	1,10	1,15	1,27	1,38	1,50	1,61	1,73	1,84	1,96	2,07	2,31
30	1,21	1,25	1,30	1,38	1,47	1,56	1,64	1,73	1,90	2,07	2,25	2,42	2,59	2,77	2,94	3,11	3,46
50	2,02	2,09	2,16	2,31	2,45	2,59	2,74	2,88	3,17	3,46	3,75	4,03	4,32	4,61	4,90	5,19	5,76
70	2,82	2,92	3,03	3,23	3,43	3,63	3,83	4,03	4,44	4,84	5,24	5,65	6,05	6,45	6,86	7,26	8,07
100	4,03	4,18	4,32	4,61	4,90	5,19	5,47	5,76	6,34	6,92	7,49	8,07	8,64	9,22	9,80	10,37	11,52
200	7,50	7,82	8,13	8,78	9,43	10,09	10,75	11,42	12,68	13,83	14,98	16,13	17,28	18,43	19,58	20,73	23,03
300	10,16	10,59	11,02	11,90	12,78	13,67	14,57	15,48	17,32	19,19	21,08	23,01	24,96	26,93	28,92	30,93	34,51
400	12,61	13,14	13,67	14,75	15,85	16,95	18,07	19,19	21,47	23,79	26,14	28,52	30,93	33,37	35,83	38,32	43,37
500	14,90	15,53	16,16	17,43	18,72	20,03	21,34	22,67	25,36	28,09	30,87	33,67	36,51	39,38	42,28	45,21	51,14
600	17,07	17,79	18,52	19,98	21,45	22,95	24,45	25,97	29,05	32,17	35,34	38,54	41,78	45,06	48,36	51,70	58,44
700	19,15	19,96	20,77	22,41	24,06	25,73	27,42	29,12	32,56	36,06	39,60	43,18	46,79	50,45	54,13	57,84	65,34
800	21,15	22,05	22,94	24,75	26,57	28,41	30,27	32,15	35,94	39,78	43,67	47,60	51,58	55,58	59,62	63,68	71,88
900	23,09	24,06	25,04	27,00	28,99	31,00	33,02	35,06	39,18	43,36	47,58	51,85	56,15	60,49	64,85	69,24	78,08
1000	24,96	26,01	27,07	29,19	31,33	33,50	35,68	37,87	42,31	46,81	51,35	55,92	60,54	65,18	69,85	74,53	83,95
1100	26,79	27,91	29,04	31,31	33,60	35,92	38,25	40,60	45,34	50,13	54,97	59,84	64,74	69,67	74,61	79,57	89,50
1200	28,56	29,75	30,95	33,37	35,81	38,27	40,74	43,23	48,26	53,34	58,45	63,60	68,77	73,96	79,15	84,35	94,74
1300	30,28	31,55	32,82	35,37	37,95	40,55	43,16	45,79	51,09	56,43	61,81	67,21	72,63	78,05	83,47	88,89	99,65
1400	31,97	33,30	34,64	37,33	40,04	42,77	45,51	48,27	53,83	59,42	65,04	70,68	76,32	81,95	87,57	93,17	104,25
1500	33,61	35,01	36,41	39,23	42,07	44,92	47,79	50,68	56,48	62,31	68,15	74,00	79,84	85,66	91,45	97,19	108,53
1600	35,22	36,67	38,14	41,08	44,04	47,02	50,01	53,01	59,04	65,08	71,13	77,17	83,19	89,17	95,10	100,96	112,47
1700	36,79	38,30	39,83	42,89	45,96	49,06	52,16	55,27	61,51	67,76	74,00	80,20	86,37	92,48	98,52	104,47	
1800	38,32	39,89	41,47	44,65	47,84	51,04	54,25	57,46	63,90	70,33	76,73	83,09	89,38	95,59	101,71		
1900	39,82	41,45	43,08	46,37	49,66	52,96	56,27	59,59	66,21	72,80	79,35	85,83	92,22	98,50			
2000	41,28	42,96	44,65	48,04	51,43	54,84	58,24	61,64	68,43	75,17	81,84	88,41	94,88	101,20			
2500	48,11	50,03	51,94	55,76	59,57	63,36	67,13	70,86	78,22	85,39							
3000	54,15	56,23	58,31	62,42	66,49	70,49	74,43	78,29									
3500	59,38	61,57	63,73	67,98	72,12	76,15											
4000	63,79	65,99	68,16	72,37													
4500	67,31																

MEGADYNE ISORAN
MEGADYNE ISORAN
RPP Gold
RPP Gold
1400 GLD 14
1400 GLD 14

ISORAN GOLD

ISORAN GOLD

Megadyne Isoran Gold belts have been developed to give a more powerful alternative to RPP and Silver belts to compete against high performance transmission systems using chains and gears, that always have a disadvantage in terms of weight, noise, lubrication and maintenance costs.

As for Isoran Silver, Isoran Gold can be used to improve and easily upgrade already existing drives working with both Isoran RPP and Isoran Silver. Also here, we always suggest to check that every other transmission component can bare the increased transmitted power, especially if you are going to replace an Isoran RPP, because of the wide power upgrade. GOLD timing belts offer to designers:

- Increased performance compared to Isoran RPP and to Isoran Silver.
- The possibility to keep using the same RPP pulleys.

Isoran GOLD belts have two nylon plies on the tooth to:

- Improve belt resistance to wearing;
- Reduce friction and noise levels.

Because of these features, replacing an Isoran RPP or an Isoran Silver with an Isoran Gold can allow:

- To reduce belt width thanks to the higher power rate; this allows also to reduce the required pulley width. They both lead to a significant transmission weight reduction.
- To reduce the pulley dimension thanks to the higher power rate; this leads to a lower belt linear speed and to the consequent noise reduction.

Gold belts have RPP profile, designed even to be interchangeable with existing deep grove profiles and run on pulleys according to ISO 13050.

Isoran Gold belts are antistatic according to BS 2050.

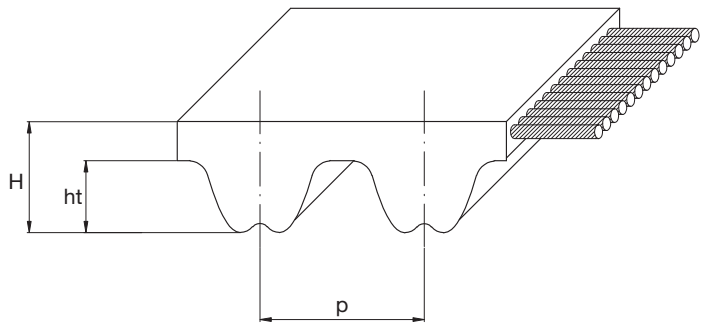

Pitch		GOLD8	GOLD14
Pitch length (mm)	p	8	14
Teeth height (mm)	ht	3,20	6,00
Belt height (mm)	H	5,40	9,70

Resistance to:	Standard belt resistance
Water	Medium
Acids / Alkalis	None
Solvents	None
Mineral oils	Low
Oils	Low
Greases	Medium
Fuels	None
Environmental agents	Medium

Other features	
Temperature range	Min: -25 °C
	Max: 80 °C
	Max peak: 100 °C
Hardness	90 +/-4 ShA
Antistatic	According to BS 2050

STANDARD TOLERANCES

Width tolerances				
Belt width (mm)		Tolerance on belt width		
		Belt length (mm)		
More than	Up to	Up to 838	More than 838 up to 1676	More than 1676
-	11,1	+0,5 -0,8	+0,5 -0,8	-
11,1	38,1	±0,8	+0,8 -1,3	+0,8 -1,3
38,1	50,8	+0,8 -1,3	±1,3	+1,3 -1,5
50,8	76,2	+1,3 -1,5	±1,5	+1,5 -2,0
76,2	170,0	+1,3 -1,5	+1,3 -2,0	±2,0

Length tolerances			
Belt length [mm]		Tolerance [mm]	Centre distance tolerance [mm]
More than	Up to		
254	381	±0,45	±0,225
381	508	±0,50	±0,250
508	762	±0,60	±0,300
762	991	±0,65	±0,325
991	1,220	±0,75	±0,375
1,220	1,524	±0,80	±0,400
1,524	1,778	±0,85	±0,425
1,778	2,032	±0,90	±0,450
2,032	2,286	±0,95	±0,475
over 2,286		$\pm [0{,}95 + \left(\frac{L - 2286}{254} \cdot 0{,}03\right)]$	$\pm [0{,}475 + \left(\frac{L - 2286}{254} \cdot 0{,}015\right)]$

For specific application where you might require different tolerances, please contact our Application Department.

Thickness tolerances				
Pitch	Nominal belt tickness (mm)	Tolerance degree [mm]		
		Standard belt	Grade 2	Grade 1
RPP8	5,40	±0,60	±0,25	±0,15
RPP14	9,70	±0,60	±0,25	±0,15

STANDARD WIDTHS												
Pitch	**Belt widths**											
	6,00	9,00	15,00	20,00	25,00	30,00	40,00	50,00	55,00	85,00	115,00	170,00
RPP3	•	•	•									
RPP5 / RPP5 DD		•	•		•							
RPP8 / RPP8 DD				•		•		•		•		
RPP14 / RPP14 DD							•		•	•	•	•

RANGE

GOLD8	
Code	Pitch length [mm]
248 GLD8	248,00
288 GLD8	288,00
320 GLD8	320,00
352 GLD8	352,00
360 GLD8	360,00
376 GLD8	376,00
384 GLD8	384,00
408 GLD8	408,00
416 GLD8	416,00
424 GLD8	424,00
456 GLD8	456,00
480 GLD8	480,00
536 GLD8	536,00
544 GLD8	544,00
560 GLD8	560,00
600 GLD8	600,00
608 GLD8	608,00
632 GLD8	632,00
640 GLD8	640,00
680 GLD8	680,00
720 GLD8	720,00
760 GLD8	760,00
800 GLD8	800,00
840 GLD8	840,00
880 GLD8	880,00
896 GLD8	896,00
920 GLD8	920,00
960 GLD8	960,00
1000 GLD8	1000,00
1040 GLD8	1040,00
1080 GLD8	1080,00
1120 GLD8	1120,00
1200 GLD8	1200,00
1224 GLD8	1224,00
1280 GLD8	1280,00
1352 GLD8	1352,00
1424 GLD8	1424,00
1440 GLD8	1440,00
1464 GLD8	1464,00
1600 GLD8	1600,00
1680 GLD8	1680,00
1760 GLD8	1760,00
1792 GLD8	1792,00
1800 GLD8	1800,00
1904 GLD8	1904,00
2000 GLD8	2000,00
2200 GLD8	2200,00
2240 GLD8	2240,00
2272 GLD8	2272,00
2400 GLD8	2400,00
2520 GLD8	2520,00
2600 GLD8	2600,00
2800 GLD8	2800,00
2840 GLD8	2840,00
3048 GLD8	3048,00
3200 GLD8	3200,00
3280 GLD8	3280,00
3600 GLD8	3600,00
4000 GLD8	4000,00
4400 GLD8	4400,00

GOLD14	
Code	Pitch length [mm]
966 GLD14	966,00
994 GLD14	994,00
1092 GLD14	1092,00
1106 GLD14	1106,00
1120 GLD14	1120,00
1190 GLD14	1190,00
1260 GLD14	1260,00
1288 GLD14	1288,00
1344 GLD14	1344,00
1400 GLD14	1400,00
1442 GLD14	1442,00
1568 GLD14	1568,00
1610 GLD14	1610,00
1750 GLD14	1750,00
1764 GLD14	1764,00
1778 GLD14	1778,00
1848 GLD14	1848,00
1890 GLD14	1890,00
1904 GLD14	1904,00
1960 GLD14	1960,00
2100 GLD14	2100,00
2240 GLD14	2240,00
2310 GLD14	2310,00
2380 GLD14	2380,00
2450 GLD14	2450,00
2520 GLD14	2520,00
2590 GLD14	2590,00
2660 GLD14	2660,00
2800 GLD14	2800,00
2968 GLD14	2968,00
3136 GLD14	3136,00
3150 GLD14	3150,00
3304 GLD14	3304,00
3360 GLD14	3360,00
3500 GLD14	3500,00
3850 GLD14	3850,00
3920 GLD14	3920,00
4326 GLD14	4326,00
4410 GLD14	4410,00
4578 GLD14	4578,00
4956 GLD14	4956,00

BASIC PERFORMANCE IN Kw FOR GOLD8 - 20 mm WIDE (kW / 20 mm)																
d (mm)	56,02	61,12	66,21	71,30	76,39	81,49	86,58	91,67	96,77	101,86	112,05	122,23	142,60	162,97	183,35	203,72
z	22	24	26	28	30	32	34	36	38	40	44	48	56	64	72	80
rpm																
10	0,10	0,11	0,12	0,13	0,14	0,15	0,16	0,17	0,18	0,19	0,21	0,22	0,26	0,30	0,34	0,37
20	0,18	0,20	0,22	0,24	0,25	0,27	0,29	0,31	0,33	0,35	0,39	0,43	0,51	0,60	0,67	0,75
30	0,26	0,28	0,31	0,34	0,36	0,39	0,42	0,45	0,48	0,50	0,56	0,62	0,74	0,85	0,98	1,10
50	0,40	0,45	0,49	0,53	0,57	0,62	0,66	0,70	0,75	0,79	0,88	0,97	1,16	1,34	1,53	1,73
70	0,54	0,60	0,66	0,71	0,77	0,83	0,89	0,95	1,01	1,07	1,19	1,31	1,56	1,81	2,07	2,33
100	0,75	0,82	0,90	0,98	1,06	1,14	1,22	1,30	1,38	1,46	1,63	1,79	2,13	2,48	2,83	3,19
200	1,38	1,52	1,66	1,81	1,95	2,10	2,25	2,40	2,55	2,70	3,00	3,31	3,94	4,58	5,23	5,89
300	1,97	2,18	2,38	2,59	2,80	3,01	3,22	3,43	3,65	3,86	4,30	4,74	5,64	6,56	7,48	8,43
400	2,54	2,81	3,07	3,34	3,61	3,88	4,15	4,43	4,70	4,98	5,55	6,12	7,28	8,46	9,65	10,86
500	3,10	3,42	3,74	4,07	3,39	4,72	5,06	5,39	5,73	6,07	6,76	7,45	8,86	10,30	11,75	13,23
600	3,64	4,02	4,40	4,78	5,16	5,55	5,94	6,34	6,73	7,13	7,94	8,76	10,41	12,10	13,81	15,54
700	4,17	4,60	5,04	5,47	5,92	6,36	6,81	7,26	7,72	8,18	9,10	10,03	11,93	13,86	15,81	17,80
800	4,70	5,18	5,67	6,16	6,66	7,16	7,66	8,17	8,68	9,20	10,24	11,29	13,42	15,59	17,79	20,01
900	5,21	5,75	6,29	6,84	7,39	7,94	8,50	9,07	9,64	10,21	11,36	12,52	14,89	17,29	19,72	22,19
1000	5,72	6,31	6,90	7,50	8,11	8,72	9,33	9,95	10,57	11,20	12,46	13,74	16,33	18,97	21,63	24,33
1100	6,23	6,86	7,51	8,16	8,82	9,48	10,15	10,82	11,50	12,18	13,56	14,94	17,76	20,62	23,51	26,44
1200	6,72	7,41	8,11	8,81	9,52	10,24	10,96	11,69	12,42	13,15	14,63	16,13	19,17	22,25	25,37	28,52
1300	7,22	7,96	8,70	9,46	10,22	10,99	11,76	12,54	13,32	14,11	15,70	17,31	20,56	23,86	27,20	30,57
1400	7,70	8,49	9,29	10,10	10,91	11,73	12,56	13,39	14,22	15,06	16,76	18,47	21,93	25,45	29,00	32,58
1500	8,19	9,03	9,88	10,73	11,60	12,47	13,34	14,22	15,11	16,00	17,80	19,62	23,29	27,02	30,78	34,57
1600	8,67	9,56	10,45	11,36	12,27	13,19	14,12	15,05	15,99	16,93	18,84	20,76	24,64	28,57	32,54	36,54
1700	9,14	10,08	11,03	11,98	12,95	13,92	14,89	15,88	16,86	17,86	19,86	21,88	25,97	30,11	34,28	38,47
1800	9,62	10,60	11,60	12,60	13,61	14,63	15,66	16,69	17,73	18,77	20,88	23,00	27,29	31,62	35,99	40,38
1900	10,08	11,12	12,16	13,21	14,27	15,34	16,42	17,50	18,59	19,68	21,88	24,11	28,59	33,12	37,68	42,26
2000	10,55	11,63	12,72	13,82	14,93	16,05	17,17	18,30	19,44	20,58	22,88	25,20	29,88	34,60	39,35	44,11
2500	12,84	14,15	15,47	16,81	18,15	19,50	20,86	22,23	23,60	24,98	27,75	30,53	36,14	41,76	47,37	52,96
3000	15,06	16,60	18,14	19,70	21,27	22,84	24,43	26,01	27,61	29,21	32,41	35,63	42,07	48,48	54,83	
3500	17,23	18,98	20,74	22,51	24,29	26,08	27,87	29,67	31,47	33,28	36,89	40,49	47,67	54,75		
4000	19,35	21,30	23,27	25,25	27,23	29,22	31,21	33,20	35,20	37,19	41,16	45,12	52,93			
4500	21,42	23,57	25,73	27,90	30,08	32,25	34,43	36,60	38,77	40,94	45,24	49,50				
5000	23,44	25,78	28,13	30,49	32,84	35,19	37,54	39,88	42,21	44,52	49,11					

ISORAN GOLD14

BASIC PERFORMANCE IN kW FOR GOLD14 - 40 mm WIDE (kW / 40 mm)																	
d (mm)	124,78	129,23	133,69	142,6	151,52	160,43	169,34	178,25	196,08	213,9	231,73	249,55	267,38	285,21	303,03	320,86	356,51
z	28	29	30	32	34	36	38	40	44	48	52	56	60	64	68	72	80
rpm																	
10	0,75	0,78	0,81	0,86	0,91	0,97	1,02	1,07	1,18	1,29	1,40	1,50	1,61	1,72	1,82	1,93	2,15
20	1,44	1,50	1,56	1,67	1,79	1,91	2,03	2,15	2,36	2,58	2,79	3,01	3,22	3,43	3,65	3,86	4,29
30	2,07	2,16	2,24	2,41	2,58	2,75	2,92	3,10	3,45	3,80	4,16	4,51	4,83	5,15	5,47	5,80	6,44
50	3,28	3,42	3,55	3,82	4,09	4,36	4,63	4,90	5,46	6,02	6,59	7,16	7,74	8,32	8,91	9,50	10,70
70	4,44	4,62	4,80	5,17	5,53	5,90	6,27	6,64	7,39	8,15	8,92	9,69	10,48	11,27	12,06	12,86	14,48
100	6,13	6,37	6,62	7,12	7,62	8,13	8,64	9,15	10,19	11,24	12,29	13,36	14,44	15,53	16,62	17,73	19,96
200	11,43	11,89	12,36	13,29	14,22	15,17	16,12	17,08	19,01	20,96	22,94	24,93	26,94	28,97	31,01	33,07	37,23
300	16,47	17,13	17,80	19,13	20,48	21,84	23,21	24,59	27,37	30,19	33,03	35,90	38,79	41,71	44,65	47,61	53,58
400	21,33	22,19	23,05	24,78	26,53	28,29	30,07	31,85	35,45	39,09	42,77	46,48	50,22	53,99	57,79	61,62	69,34
500	26,07	27,12	28,17	30,29	32,42	34,58	36,74	38,92	43,31	47,76	52,25	56,77	61,34	65,94	70,57	75,23	84,64
600	30,71	31,94	33,18	35,68	38,19	40,72	43,27	45,84	51,01	56,24	61,51	66,84	72,20	77,61	83,05	88,52	99,56
700	35,27	36,69	38,11	40,97	43,86	46,76	49,69	52,63	58,56	64,55	70,60	76,70	82,84	89,03	95,25	101,51	114,12
800	39,76	41,36	42,96	46,18	49,43	52,70	55,99	59,31	65,98	72,72	79,52	86,38	93,28	100,23	107,21	114,23	128,37
900	44,19	45,96	47,74	51,32	54,93	58,56	62,21	65,89	73,29	80,76	88,30	95,89	103,54	111,22	118,94	126,70	142,30
1000	48,56	50,51	52,46	56,39	60,35	64,34	68,34	72,37	80,49	88,69	96,94	105,25	113,61	122,02	130,45	138,92	155,94
1100	52,88	55,00	57,13	61,40	65,71	70,04	74,40	78,78	87,60	96,49	105,45	114,46	123,52	132,62	141,75	150,90	169,27
1200	57,16	59,44	61,74	66,36	71,00	75,68	80,38	85,10	94,61	104,19	113,83	123,53	133,26	143,03	152,83	162,64	182,30
1300	61,39	63,84	66,31	71,26	76,24	81,25	86,28	91,34	101,52	111,78	122,09	132,45	142,84	153,26	163,70	174,14	195,02
1400	65,58	68,20	70,82	76,10	81,42	86,76	92,12	97,51	108,35	119,26	130,22	141,23	152,25	163,30	174,35	185,39	207,43
1500	69,73	72,51	75,30	80,90	86,54	92,21	97,90	103,61	115,10	126,64	138,24	149,86	161,50	173,15	184,78	196,40	219,52
1600	73,84	76,78	79,73	85,65	91,61	97,60	103,61	109,64	121,75	133,92	146,13	158,36	170,59	182,80	195,00	207,15	231,29
1700	77,91	81,01	84,12	90,36	96,63	102,93	109,25	115,59	128,32	141,10	153,90	166,71	179,50	192,27	204,98	217,64	
1800	81,95	85,20	88,47	95,02	101,60	108,20	114,83	121,48	134,81	148,17	161,55	174,91	188,25	201,53	214,74		
1900	85,95	89,36	92,78	99,63	106,52	113,42	120,35	127,29	141,21	155,14	169,07	182,97	196,82	210,59			
2000	89,92	93,48	97,05	104,20	111,38	118,59	125,81	133,04	147,52	162,01	176,47	190,88	205,21	219,44			
2500	109,27	113,54	117,82	126,39	134,98	143,56	152,14	160,71	177,78	194,73							
3000	127,78	132,71	137,64	147,49	157,31	167,10	176,85	186,54									
3500	145,46	150,98	156,48	167,44	178,33	183,13											
4000	162,27	168,30	174,30	186,19													
4500	178,17																

Megadyne can make special execution on customer's request to improve belt properties and to better suit to special applications.

SUPER

On customer's request and with minimum quantity Megadyne can produce Isoran, Isoran RPP and Isoran Silver with a double nylon fabric on the tooth surface to improve torque carrying capacity. Isoran Gold has already two nylon fabric plies.

The advantages of this solution are:

- Exceptional resistance to abrasion
- Low coefficient of friction
- Increased drive efficiency
- Increased belt and pulley life.

This solution will increase the belt performances by a 10%.

ANTISTATIC

On customer's request and with minimum quantity Megadyne can produce Isoran L, H, RPP5 and RPP8 in antistatic version according to BS 2050. We remind that Isoran Silver and Isoran Gold already comply BS 2050.
For very severe applications, Megadyne can also produce super-conductive belts overcoming BS 2050 parameters.

HIGH TEMPERATURE

On customer's request and with minimum quantity Megadyne can produce special belts to work up to 130°C. Please check with our Application Department for advice or for even more severe requirement.

SPECIAL COMPOUNDS

On customer's request and with minimum quantity Megadyne can also manufacture belts to stand to specific chemicals or environments as acids, oils, solvents, etc. Please check with our Application Department for guidance.

LOW NOISE

On customer's request and with minimum quantity Megadyne can produce soft compounded belts (60 ±3 ShA) to reduce noise level. In this case, belt's performance will decrease by a 10% compared to an Isoran or an Isoran RPP.

SPECIAL BRANDING

On customer's request and with minimum quantity Megadyne can brand the belts with special branding.

SPECIAL PACKAGING

On customer's request and with minimum quantity Megadyne can package the belts following special customer's indications.

PAINTING

For painting applications (as automotive painting shop) Megadyne suggest to use Megapaint, special suited and developed for this kind of application. Belts are available in RPP8 pitch and have the same performance of SILVER8. For further information, please check in Megapaint brochure or contact Megadyne's Application Department.

USEFUL FORMULAS AND CONVERSION TABLE

SPEED

V: peripheral speed [m/s]
n_1: rotation speed [RPM]
d_1: pulley diameter [mm]

$$V = \frac{d_1 \cdot n_1}{19100} \qquad n_1 = \frac{V \cdot 19100}{d_1} \qquad d_1 = \frac{V \cdot 19100}{n_1}$$

FORCES AND TORQUE

F_u: peripheral force [N]
M_t: drive torque [Nm]
P: power [kW]
n_1: rotation speed [RPM]
d_1: pulley diameter [mm]
V: peripheral speed [m/s]

$$F_u = \frac{19{,}1 \cdot 10^6 \cdot P}{d_1 \cdot n_1} \qquad F_u = \frac{2000 \cdot M}{d_1} \qquad F_u = \frac{P \cdot 10^3}{d_1}$$

$$M_t = \frac{P \cdot 9550}{n_1} \qquad M_t = \frac{F_u \cdot d_1}{2000} \qquad M_t = \frac{P \cdot d_1}{2 \cdot V}$$

SPEED

P: power [kW]
F_u: peripheral force [N]
M_t: drive torque [Nm]
n_1: rotation speed [RPM]
d_1: pulley diameter [mm]

$$P = \frac{F_u \cdot d_1 \cdot n_1}{19{,}1 \cdot 10^6} \qquad P = \frac{M_t \cdot n_1}{9550} \qquad P = \frac{F_u \cdot V}{1000}$$

To convert from	To	Multiply by
CV	HP	0,9863201
CV	kcal/h	63,24151
CV	W	735,4988
CV	kW	0,7354988
CV	kgf ⇔ m/s	75
CV	lbf ⇔ ft/s	542,476
HP	CV	1,01387
HP	kcal/h	641,1865
HP	W	745,6999
HP	kW	0,7456999
HP	kgf ⇔ m/s	76,04022
HP	lbf ⇔ ft/s	550
in	m	0,0254
in	cm	2,54
in	mm	25,4
in	ft	0,083
in^2	m^2	0,00064516
in^2	cm^2	6,4516
in^2	mm^2	645,16
in^2	ft^2	0,006944444
in^3	m^3	$1{,}63871 \cdot 10^{-5}$
in^3	cm^3	16,38706
in^3	mm^3	16387,06
in^3	ft^3	0,000578704

To convert from	To	Multiply by
J	CV ⇔ h	$3{,}77673 \cdot 10^{-7}$
J	HP ⇔ h	$3{,}72506 \cdot 10^{-7}$
J	kWh	$2{,}77778 \cdot 10^{-7}$
kg	lb	2,204623
kgf	N	9,80665
kgf	lbf	2,204623
kgf ⇔ m/s	CV	0,01333333
kgf ⇔ m/s	W	9,80665
kgf ⇔ m/s	kW	0,00980665
kW	CV	1,359622
kW	kcal/h	859,8452
kW	W	1000
kW	kgf ⇔ m/s	101,9716
kW	lbf ⇔ ft/s	737,5621
lb	kg	0,4535924
lb	kgf	0,4535924
lb	N	4,448222
N	kgf	0,1019716
N	lbf	0,2248089
W	CV	0,001359622
W	HP	0,001341022
W	kcal/h	0,8598452
W	kW	0,001
W	kgf ⇔ m/s	0,1019716
W	lbf ⇔ ft/s	0,7375621

The data and information contained in the present catalogue are up-to-dated to the date of the catalogue's printing. Megadyne S.p.A. reserves the right to modify the specifications, performances and other information relating to the belts described in the present catalogue, at any time at its own discretion, without any prior notice. For updating refer to our web site www.megadynegroup.com.
Technical specifications, performances and other information provided in the present catalogue are indicative and do not bound Megadyne unless such specifications, performances or other information are expressly agreed in the agreement with the customer.
We also recommend to read carefully the following documents in our web site www.megadynegroup.com:

- Megadyne General Conditions of Sale (comprising the warranty).
- Theoretical Belt Life.
- Drive Components: Storage, Installation, Maintenance and Troubleshooting Handbook.
- Belts standard use condition and temperature.

Copyright Notice: Megadyne S.p.A. copyright. All rights reserved. Megadyne is and shall remain the owner of all rights on drawings, technical specifications and any other information contained in the present catalogue or otherwise communicated by Megadyne S.p.A. to the customer. The customer shall not disclose such information to third parties or use such information for purposes different from the definition of the order to Megadyne S.p.A., unless upon prior written authorization of Megadyne.

ISO 9001:2008 - ISO 14001:2004
MEGADYNE RUBBER S.A.

BELARUS

Minsk
Kuzme Chornogo 31 -901
220100 Minsk
Phone +375 17 2802486
Info.ee@megadynegroup.com

BRASIL

Sorocaba
Avenida Dr. Armando Pannunzio
610 CEP 18050-000
Sorocaba, São Paulo
Phone +55 15 2101 7700
inquiries@jasonindustrial.com

CANADA

Edmonton
10020 42nd Avenue Edmonton
Alberta T6E 5B4
Phone: +1 780 461 4400
inquiries@jasonindustrial.com

Montreal
9135 Cote De Liesse
Dorval, Quebec H9P 2N9
Phone: +1 514 31 2341
inquiries@jasonindustrial.com

Toronto
927 Matheson Boulevard East
Mississauga, Ontario L4W 2R7
Phone: +1 905 602 4400
inquiries@jasonindustrial.com

CHINA

Beijing
NO.37-344 Fudongyuan.Ciqu Street
Taihu town, Tongzhou
Beijing 101111
Phone +86 10 8150 7478
info.cn@megadynegroup.com

Foshan
n.5 Hedang Industrial Area
East Side Wu Gang Road
Changcheng district, Foshan
Guangdong 528031
Phone +86 757 83815530
info.cn@megadynegroup.com

Fujiang
No.720 Marketing Comprehesive
Building, South Lingshui Street
Wuli Industrial Park,
Jinjang City, Fujian, 362261
Phone +86 595 8816 0309
info.cn@megadynegroup.com

Ningbo
Industrial Chemical Area,
Fengxiang Road 777, Xiepu Town
Zhenghai District,
Ningbo City , Zhejiang Province,
315203
Phone +86 574 8650 2886
info.cn@megadynegroup.com

Qingdao
Longshan town office,
Nange backstreet Jimo city –
Qingdao – Shandong, 266100
Phone +86 532 8765 2117
info.cn@megadynegroup.com

Shanghai
Business Office A area,
6th Floor, 11th Building,
No.1588, Li an Road
Shanghai, 201105
Phone +86 21 5447 1473
info.cn@megadynegroup.com

Shenyang
Room303, Flat 3, No.131-9
Baogong South St.
Tiexi District
Shenyang,110074
Phone +86 24 2572 3238
Fax +86 24 2572 3238
info.cn@megadynegroup.com

COLOMBIA

Cartagena
Diag 22-56-112
Bario el Bosque
Cartagena, Colombia
NIT 900-648-909-6
Phone: 011 57 313 501 5397
inquiries@jasonindustrial.com

CZECH REPUBLIC

Praha
Karlovarska Business Park
Na Hurce 1077/4 (Budova C),
161 00 –
Praha 6 – Ruzyne
Phone +420 2 8481 7181
office.cz@megadynegroup.com

FRANCE

Paris
Logistic Center Zi Les Bordes - 15
Rue Gustave Madiot
91923 Bondoufle Cedex
Phone +33 1 6079 8200
info.fr@megadynegroup.com

St. Jean De Maurienne
le prè de la Garde -Av. Italie-
73300 S. Jean de Maurienne
Phone +33 4 7964 0613
info.fr@megadynegroup.com

GERMANY

Borchen
Nikolaus Otto Straße 24
33178 Borchen
Phone +49 5251 8735 0
info.de@megadynegroup.com

Elchingen
Daimlerstraße 13
89275 Elchingen
Phone +49 7308 9665 0
produktion@megadynegroup.com

HUNGARY

Budapest
West Gate Business Park
Topark u. 9
2045 Torokbalint
Phone +36 23 428 628
info.hu@megadynegroup.com

MEXICO

Mexico C.P.
Av. Ceylan 959 Int. 9 Y 10
Industrial Vallejo Azcapotzalco,
Mexico C.P. 02300
Phone +52 55 5587 3680
inquiries@jasonindustrial.com

POLAND

Bydgoszcz
Ołowiana 10, 85-461 Bydgoszcz
POLAND
Phone +48 52 348 77 12
info.pl@megadynegroup.com

SOUTH AFRICA

Johannesburg
Unit 4 - 6, 24 Park Avenue South
- Highway Business Park -
Rooihuiskraal,Centurion
Phone +27 (0)12 661 1652
Fax +27 (0)12 661 1634
info.sa@megadynegroup.com

SPAIN

Barcelona
Ctra de l'Arboc, Km 1,7
08800 Vilanova I La Geltru
Barcelona
Phone +34 93 811 5450
info.sp@megadynegroup.com

SWEDEN

Kristianstad
Estrids Väg 15
291 65 Kristianstad
Phone +46 10 1309600
info.se@megadynegroup.com

THAILAND

Bangkok
S.S.P. Tower – 16th Floor –
Office 10 Soi Sukhumvit 63
(Ekamai) Klong Tan Nuea,
Vadhana Bangkok 10110
Phone: +66 (0) 27115477
info.apac@megadynegroup.com

TURKEY

Izmir
Mustafa Kemal Ataturk Mahallesi
Izmir Ankara Asfalti Caddesi
No:19, 35170 Ulucak Kemalpasa
Phone +90 232 877 07 00
info@rultrans.com.tr

U.K.

Birmingham
Unit 1, The Washington Centre,
Halesowen Road, Netherton,
Dudley, West Midlands, DY2 9RE
Phone: +44 1384 215 021
sales@megadynegroup.com

U.S.A

California
5660-5680 Rickenbacker Road Bell
Los Angeles, CA 90201
Phone +1 323 265 8061
inquiries@jasonindustrial.com

Florida
5120-B East Adamo Drive Tampa,
FL 33619
Phone +1 813 241 4111
inquiries@jasonindustrial.com

Georgia
Belt Corporation of America
253 Castleberry Industrial Dr.
Cumming, GA 30040
Phone +770 887-9725
inquiries@jasonindustrial.com

Illinois
221 South Westgate Drive
Carol Stream, IL 60188
Phone: +1630 752 0600
inquiries@jasonindustrial.com

New Jersey Americas HQ
340 Kaplan Drive Fairfield
NJ 07004
Phone +1 973 227 4904
inquiries@jasonindustrial.com

North Carolina
11016 Granite Street, Charlotte,
NC 28273
Phone +1 704 583 5388
inquiries@jasonindustrial.com

Oregon
One SE Alder St., Portland,
OR 97214
Phone +1 888 231 7224
inquiries@jasonindustrial.com

South Carolina
101 Pelham Davis Cir, Greenville,
SC 29615-5752
Phone +1 864 288 9916
inquiries@jasonindustrial.com

Texas
8510 Ambassador Row, Dallas
TX 75247
Phone +1 972 438 6992
inquiries@jasonindustrial.com

HEADQUARTERS

ITALY Torino

Via S. Lucia, 114
10075 Mathi (Torino)
Phone +39 011 926 8052
info@megadynegroup.com

www.megadynegroup.com
www.jasonindustrial.com

MEGADYNE

Edition: April 2015